Coupling units - ENYA series

E1K

- Coupling relays
- 1 change over contact
- Width 17.5 mm
- Installation design



Technical data

1. Functions
Coupling relays

2. Indicators
Yellow LED R ON/OFF: indication of relay output

3. Mechanical design
Self-extinguishing plastic housing, IP rating IP40
Mounted on DIN-rail TS 35 according to EN 60715
Mounting position: any
Shockproof terminal connection according to VBG 4 (PZ1 required), IP rating IP20
Tightening torque: max. 1Nm
Terminal capacity:
- 1 x 0.5 to 2.5mm² with/without multicore cable end
- 1 x 4mm² without multicore cable end
- 2 x 0.5 to 1.5mm² with/without multicore cable end
- 2 x 2.5mm² flexible without multicore cable end

4. Input circuit

Supply voltage:	24 to 240V AC/DC
Terminals:	A1(+)-A2
Tolerance:	-15% to +10%
Rated consumption:	4VA (1.5W)
Rated frequency:	AC 48 to 63Hz
Duty cycle:	100%
Reset time:	100ms
Residual ripple for DC:	10%
Drop-out voltage:	>30% of minimum rated supply voltage
Overvoltage category:	III (in accordance with IEC 60664-1)
Rated surge voltage:	4kV

5. Output circuit
1 potential free change over contact

Rated voltage:	250V AC
Switching capacity:	2000VA (8A / 250V)
Fusing:	8A fast acting
Mechanical life:	20 x 10^6 operations
Electrical life:	2 x 10^5 operations at 1000VA resistive load
Switching frequency:	max. 6/min at 1000VA resistive load (in accordance with IEC 60947-5-1)
Overvoltage category:	III (in accordance with IEC 60664-1)
Rated voltage:	4kV

6. Ambient conditions

Ambient temperature:	-25 to +55°C
Storage temperature:	-25 to +70°C
Transport temperature:	-25 to +70°C
Relative humidity:	15% to 85% (in accordance with IEC 60721-3-3 class 3K3)
Pollution degree:	2, if built in 3 (in accordance with IEC 60664-1)

7. Dimensions

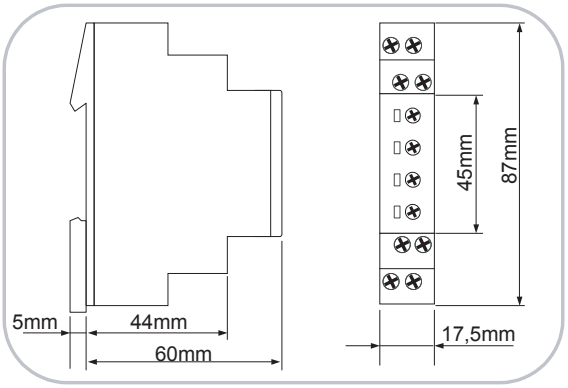

8. Weight
Single packing: 60g

Subject to alterations and errors

Functions

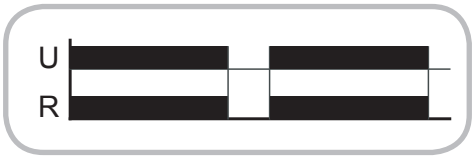

Connections

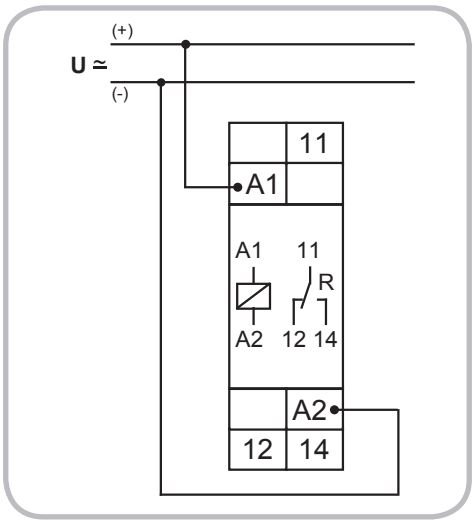

Ordering information

Type	Functions	Supply voltage	Part No. (PQ 1)	Part No. (PQ 10)
E1K 24-240V AC/DC	Coupling relay	24-240V AC/DC	110700	-

Subject to alterations and errors