E75229

Push-in L-fitting for pneumatic connections

AirBox push-in L-connector 10 pcs.

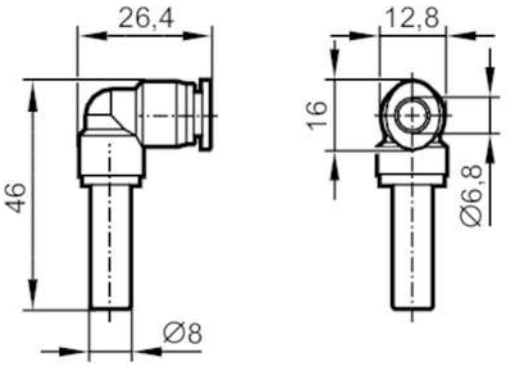

Application		
Media		compressed air according to ISO 8573-1: 2001
Operating conditions		
Operating pressure	[bar]	20; (min. -0,95)
Ambient temperature	[°C]	-20...80
Mechanical data		
Weight	[g]	34.5
Materials		housing: nickel-plated brass / PA66; Tooth lock washer: stainless steel
Tube fittings		6 mm
Sleeve diameter	[mm]	8
Remarks		
Pack quantity		10 pcs.