Brand of NTN Group

Technical data

UC218G2L3

Insert bearings



Spherical outer diameter, fixing by socket set screw, triple lip seal

VISUAL (S)

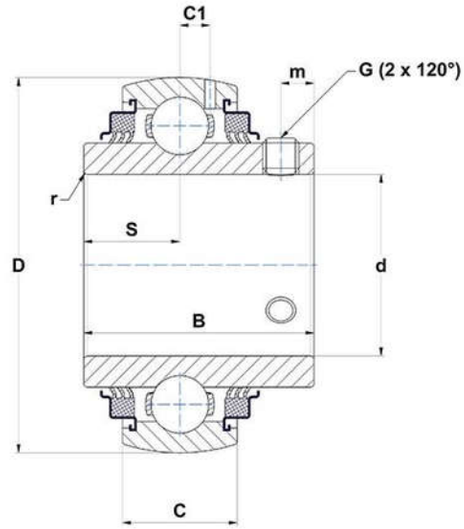

PRODUCT DEFINITION

Brand	SNR
B - Width of Inner Ring	96 mm
C - Width of Outer Ring	37 mm
C1 - Distance center of OR to center of lubrication zone	12 mm
d - Shaft diameter	90 mm
D - Outer diameter of OR	160 mm
G - Set screw size	M12x1,25
m - Distance to set screw	14 mm

UC218G2L3
Insert bearings

PRODUCT DEFINITION	
r - Radius Inner Ring	2
S - Distance front side/bearing centre	39,7 mm
f0 - Factor	14.4
SW - Wrench size	6 mm

PRODUCT PERFORMANCE	
C - Dynamic load rating	96000000 mN
C0 - Static load rating	71500000 mN
Operating temperature min.	253,15 °K
Operating temperature max.	373,15 °K

OTHER FEATURES	
Mass	4,45 kg
Recommended tightening torque for set screw	33 N-m

BEARING FREQUENCIES	
BPFO - Over rolling frequency on outer ring (60 rpm)	4.111 Hz
BPFI - Over rolling frequency on inner (60 rpm)	5.889 Hz
BSF - Over rolling frequency on rolling element (60 rpm)	5.44649696287964 Hz
BRF - Rotational frequency – rolling element (60 rpm)	2.72324848143982 Hz
FTF - Rotational frequency - cage (60 rpm)	0.4111 Hz