Operating Instructions

Display and adjustment module

PLICSCOM



Document ID: 36433

Contents

1 About this document ... 4
- 1.1 Function ... 4
- 1.2 Target group ... 4
- 1.3 Symbols used ... 4

2 For your safety ... 5
- 2.1 Authorised personnel ... 5
- 2.2 Appropriate use ... 5
- 2.3 Warning about incorrect use ... 5
- 2.4 General safety instructions ... 5
- 2.5 EU conformity ... 6
- 2.6 NAMUR recommendations ... 6
- 2.7 Security concept, Bluetooth operation ... 6
- 2.8 Radio licenses ... 7
- 2.9 Environmental instructions ... 7

3 Product description ... 8
- 3.1 Configuration ... 8
- 3.2 Principle of operation ... 9
- 3.3 Packaging, transport and storage ... 12

4 Prepare setup ... 14
- 4.1 Insert display and adjustment module ... 14
- 4.2 Adjustment system ... 15

5 Parallel operation of display and adjustment modules ... 17
- 5.1 Sensors of the older generations ... 17
- 5.2 Sensors of the newer generation ... 17

6 Set up Bluetooth connection with smartphone/tablet ... 19
- 6.1 Preparations ... 19
- 6.2 Connecting ... 20
- 6.3 Sensor parameter adjustment ... 21

7 Set up Bluetooth connection with PC/notebook ... 22
- 7.1 Preparations ... 22
- 7.2 Connecting ... 23
- 7.3 Parameter adjustment ... 24

8 Maintenance and fault rectification ... 25
- 8.1 Maintenance ... 25
- 8.2 How to proceed if a repair is necessary ... 25

9 Dismount ... 26
- 9.1 Dismounting steps ... 26
- 9.2 Disposal ... 26

10 Supplement ... 27
- 10.1 Technical data ... 27
- 10.2 Dimensions ... 28
- 10.3 Industrial property rights ... 29
- 10.4 Hash function acc. to mbed TLS ... 29
- 10.5 Trademark ... 29

36433-EN-180221

Safety instructions for Ex areas



Take note of the Ex specific safety instructions for Ex applications. These instructions are attached as documents to each instrument with Ex approval and are part of the operating instructions manual.

Editing status: 2018-02-19

36433-EN-180221

1 About this document

1.1 Function

This operating instructions manual provides all the information you need for mounting, connection and setup as well as important instructions for maintenance, fault rectification, the exchange of parts and the safety of the user. Please read this information before putting the instrument into operation and keep this manual accessible in the immediate vicinity of the device.

1.2 Target group

This operating instructions manual is directed to trained personnel. The contents of this manual must be made available to the qualified personnel and implemented.

1.3 Symbols used



Document ID
This symbol on the front page of this instruction refers to the Document ID. By entering the Document ID on www.vega.com you will reach the document download.



Information, tip, note
This symbol indicates helpful additional information.



Caution: If this warning is ignored, faults or malfunctions can result.

Warning: If this warning is ignored, injury to persons and/or serious damage to the instrument can result.



Danger: If this warning is ignored, serious injury to persons and/or destruction of the instrument can result.



Ex applications
This symbol indicates special instructions for Ex applications.

- **List**
  The dot set in front indicates a list with no implied sequence.

→ **Action**
This arrow indicates a single action.

1 **Sequence of actions**
Numbers set in front indicate successive steps in a procedure.



Battery disposal
This symbol indicates special information about the disposal of batteries and accumulators.

2 For your safety

2.1 Authorised personnel

All operations described in this documentation must be carried out only by trained specialist personnel authorised by the plant operator.

During work on and with the device the required personal protective equipment must always be worn.

2.2 Appropriate use

The pluggable display and adjustment module is used for measured value indication, adjustment and diagnoses with continuously measuring sensors.

You can find detailed information about the area of application in chapter "*Product description*".

Operational reliability is ensured only if the instrument is properly used according to the specifications in the operating instructions manual as well as possible supplementary instructions.

2.3 Warning about incorrect use

Inappropriate or incorrect use of this product can give rise to application-specific hazards, e.g. vessel overfill through incorrect mounting or adjustment. Damage to property and persons or environmental contamination can result. Also, the protective characteristics of the instrument can be impaired.

2.4 General safety instructions

This is a state-of-the-art instrument complying with all prevailing regulations and directives. The instrument must only be operated in a technically flawless and reliable condition. The operator is responsible for the trouble-free operation of the instrument. When measuring aggressive or corrosive media that can cause a dangerous situation if the instrument malfunctions, the operator has to implement suitable measures to make sure the instrument is functioning properly.

During the entire duration of use, the user is obliged to determine the compliance of the necessary occupational safety measures with the current valid rules and regulations and also take note of new regulations.

The safety instructions in this operating instructions manual, the national installation standards as well as the valid safety regulations and accident prevention rules must be observed by the user.

For safety and warranty reasons, any invasive work on the device beyond that described in the operating instructions manual may be carried out only by personnel authorised by the manufacturer. Arbitrary conversions or modifications are explicitly forbidden. For safety reasons, only the accessory specified by the manufacturer must be used.

To avoid any danger, the safety approval markings and safety tips on the device must also be observed and their meaning looked up in this operating instructions manual.

2.5 EU conformity

The device fulfils the legal requirements of the applicable EU directives. By affixing the CE marking, we confirm the conformity of the instrument with these directives.

You can find the EU conformity declaration on our website under www.vega.com/downloads.

2.6 NAMUR recommendations

NAMUR is the automation technology user association in the process industry in Germany. The published NAMUR recommendations are accepted as the standard in field instrumentation.

The device fulfils the requirements of the following NAMUR recommendations:

- NE 21 – Electromagnetic compatibility of equipment
- NE 53 – Compatibility of field devices and display/adjustment components

For further information see www.namur.de.

2.7 Security concept, Bluetooth operation

Sensor adjustment via Bluetooth is based on a multi-stage security concept.

Authentication
When starting Bluetooth communication, an authentication is carried out between sensor and adjustment device by means of the sensor PIN. The sensor PIN is part of the respective sensor and must be entered in the adjustment device (smartphone/tablet). To increase adjustment convenience, this PIN is stored in the adjustment device. This process is secured via an algorithm acc. to standard SHA 256.

Protection against incorrect entries
In case of multiple incorrect PIN entries in the adjustment device, further entries are possible only after a certain amount of time has passed.

Encrypted Bluetooth communication
The sensor PIN as well as the sensor data are transmitted encrypted between sensor and adjustment device according to Bluetooth standard 4.0.

Modification of the default sensor PIN
Authentication by means of the sensor PIN is only possible after the default sensor PIN "*0000*" has been changed in the sensor by the user.

2.8 Radio licenses

The radio module used in the instrument for wireless Bluetooth communication is approved for use in countries of the EU and EFTA. It was tested by the manufacturer according to the latest edition of the following standard:

- EN 300 328 – Wideband transmission systems

The radio module used in the instrument for wireless Bluetooth communication has also radio licenses for the USA and Canada applied for by the manufacturer:

- USA - FCC ID: PI4BL600
- Canada - IC: 1931B-BL600

2.9 Environmental instructions

Protection of the environment is one of our most important duties. That is why we have introduced an environment management system with the goal of continuously improving company environmental protection. The environment management system is certified according to DIN EN ISO 14001.

Please help us fulfil this obligation by observing the environmental instructions in this manual:

- Chapter "*Packaging, transport and storage*"
- Chapter "*Disposal*"

3 Product description

3.1 Configuration

Type label

The type label contains the most important data for identification and use of the instrument:



Fig. 1: Layout of the type label (example)

1 *Instrument type/Product code*
2 *Hardware version*
3 *Data matrix code for VEGA Tools app*
4 *Serial number of the instrument*
5 *Ex approvals*
6 *FCC/IC approvals*
7 *Switch position for Bluetooth function*

Instrument versions

The indicating/adjustment module consists of a display with full dot matrix as well as four keys for adjustment.

An LED background lighting is integrated in the display. It can be switched off or on via the adjustment menu.

The instrument is optionally equipped with Bluetooth functionality. This version allows wireless adjustment of the sensor via smartphone/tablet or PC/notebook. Furthermore, the keys of this version can also be operated with a magnetic pen right through the closed housing lid with inspection window.

As an option, the display and adjustment module comes equipped with heating. This makes it possible to read the display at low temperatures down to -40 °C (-40 °F).

Scope of this operating instructions manual

This operating instructions manual applies to the following hardware and software versions of the display and adjustment module:

Without Bluetooth

- Hardware from 1.10.1
- Software from 1.10

With Bluetooth

- Hardware from 1.11.1
- Software from 1.12.1

Scope of delivery

The scope of delivery encompasses:

- Display and adjustment module

- Magnetic pen (with Bluetooth version)
- Documentation
  - This operating instructions manual
  - Supplementary instructions manual 31708 "*Heating for display and adjustment module*" (optional)

Note:
Optional instrument features are also described in this operating instructions manual. The respective scope of delivery results from the order specification.

3.2 Principle of operation

Application area

The pluggable display and adjustment module PLICSCOM is used for measured value indication, adjustment, and diagnostics for the following instruments of the VEGA plics® family:

- VEGAPULS series 60
- VEGAFLEX series 60 and 80
- VEGASON series 60
- VEGACAL series 60
- PROTRAC Serie
- VEGABAR series 50, 60 and 80
- VEGADIF 65
- VEGADIS 61, 81
- VEGADIS 82[1)]

[1)] The operation of a display and adjustment module with integrated Bluetooth function is not supported by VEGADIS 82.

Wireless connection



Fig. 2: Wireless connection to standard operating devices

1 Display and adjustment module
2 Sensor
3 Smartphone/Tablet
4 Bluetooth USB adapter
5 PC/Notebook

The display and adjustment module PLICSCOM with integrated Bluetooth functionality allows wireless connection to smartphones/tablets or PCs/notebooks.

Installation in the sensor housing

The display and adjustment module is mounted in the respective sensor housing. On instruments with double chamber housing, the display and adjustment module can be mounted either in the electronics compartment or in the terminal compartment.

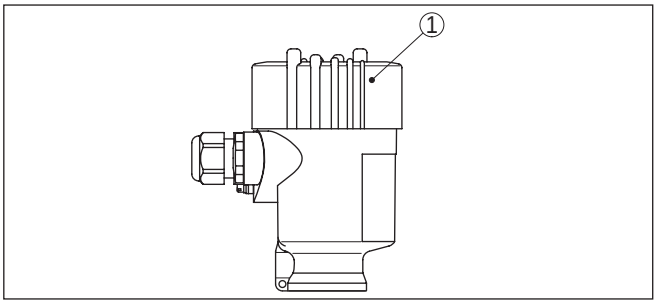

Fig. 3: Mounting the display and adjustment module in the single chamber housing

1 Mounting in the electronics compartment

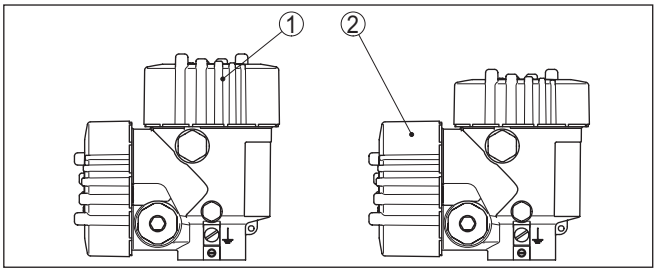

Fig. 4: Mounting the display and adjustment module in the double chamber housing

1 Mounting in the electronics compartment
2 Mounting in the terminal compartment

The electrical connection is carried out via spring contacts in the sensor and contact surfaces in the display and adjustment module. After mounting, the sensor and display and adjustment module are splash-water protected even without housing lid.

Mounting in the external display and adjustment unit

The external display and adjustment unit is another installation option.

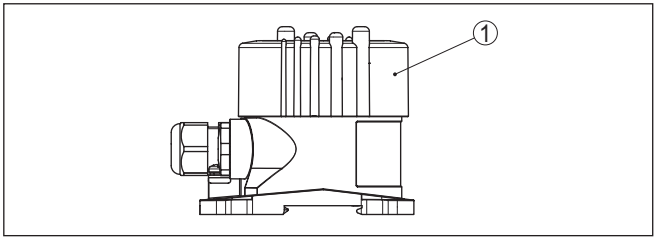

Fig. 5: Mounting the display and adjustment module in the external display and adjustment unit

1 Installation position

Range of functions

The range of functions of the display and adjustment module is determined by the sensor and depends on the respective software version of the sensor.

Voltage supply

Power is supplied directly via the respective sensor or the external display and adjustment unit. An additional connection is not required.

Background lighting
The backlight is also powered by the sensor or the external display and adjustment unit. Prerequisite for this is a supply voltage at a certain level. The exact voltage specifications can be found in the operating instructions manual of the respective sensor.

Bluetooth function
The version with integrated Bluetooth function requires a sensor supply with higher voltage. You can find the required operating voltage in chapter "*Technical data*".

Heating
The optional heating requires its own operating voltage. You can find further details in the supplementary instructions manual "*Heating for display and adjustment module*".

3.3 Packaging, transport and storage

Packaging

Your instrument was protected by packaging during transport. Its capacity to handle normal loads during transport is assured by a test based on ISO 4180.

The packaging of standard instruments consists of environment-friendly, recyclable cardboard. For special versions, PE foam or PE foil is also used. Dispose of the packaging material via specialised recycling companies.

Transport

Transport must be carried out in due consideration of the notes on the transport packaging. Nonobservance of these instructions can cause damage to the device.

Transport inspection

The delivery must be checked for completeness and possible transit damage immediately at receipt. Ascertained transit damage or concealed defects must be appropriately dealt with.

Storage

Up to the time of installation, the packages must be left closed and stored according to the orientation and storage markings on the outside.

Unless otherwise indicated, the packages must be stored only under the following conditions:

- Not in the open
- Dry and dust free
- Not exposed to corrosive media
- Protected against solar radiation
- Avoiding mechanical shock and vibration

Storage and transport temperature

- Storage and transport temperature see chapter "*Supplement - Technical data - Ambient conditions*"
- Relative humidity 20 … 85 %

Lifting and carrying

With instrument weights of more than 18 kg (39.68 lbs) suitable and approved equipment must be used for lifting and carrying.

4 Prepare setup

4.1 Insert display and adjustment module

The display and adjustment module can be inserted into the sensor and removed again at any time. You can choose any one of four different positions - each displaced by 90°. It is not necessary to interrupt the power supply.

Proceed as follows:

1. Unscrew the housing lid
2. Place the display and adjustment module on the electronics in the desired position and turn it to the right until it snaps in.
3. Screw housing lid with inspection window tightly back on

Disassembly is carried out in reverse order.

The display and adjustment module is powered by the sensor, an additional connection is not necessary.



Fig. 6: Installing the display and adjustment module in the electronics compartment of the single chamber housing

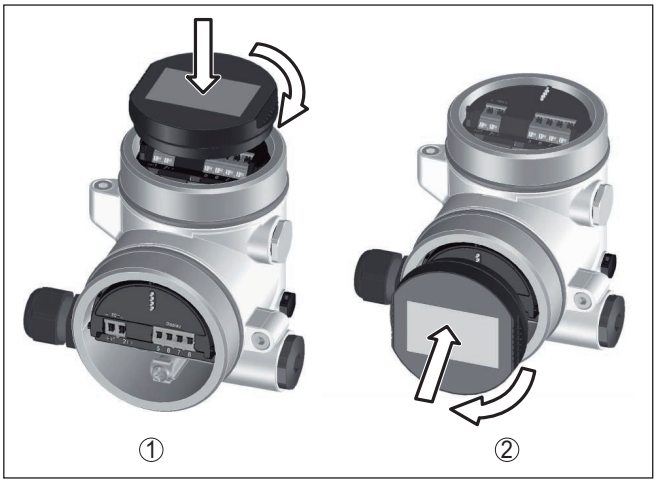

Fig. 7: Installing the display and adjustment module in the double chamber housing

1 In the electronics compartment
2 In the terminal compartment

Note:
If you intend to retrofit the instrument with a display and adjustment module for continuous measured value indication, a higher lid with an inspection glass is required.

4.2 Adjustment system

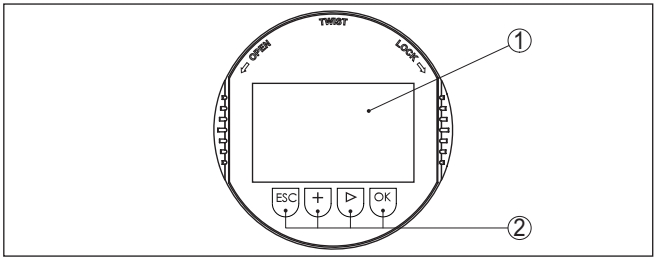

Fig. 8: Display and adjustment elements

1 LC display
2 Adjustment keys

Key functions

- ***[OK]*** key:
  - Move to the menu overview
  - Confirm selected menu
  - Edit parameter
  - Save value
- ***[->]*** key:
  - Change measured value presentation
  - Select list entry

- Select menu items in the quick setup menu
- Select editing position

- ***[+]*** key:
  - Change value of the parameter

- ***[ESC]*** key:
  - Interrupt input
  - Jump to next higher menu

Operating system - Keys direct

The instrument is operated via the four keys of the display and adjustment module. The individual menu items are shown on the LC display. You can find the function of the individual keys in the previous illustration.

Adjustment system - keys via magnetic pen

With the Bluetooth version of the display and adjustment module you can also adjust the instrument with the magnetic pen. The pen operates the four keys of the display and adjustment module right through the closed lid (with inspection window) of the sensor housing.

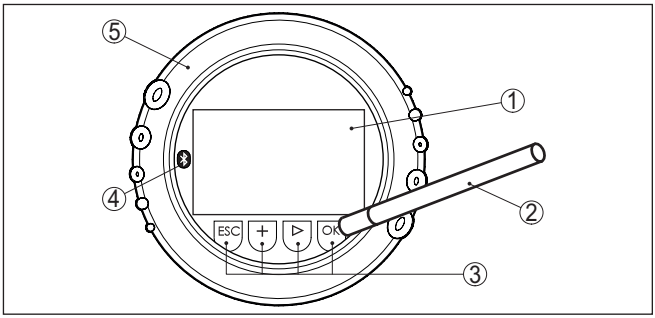

Fig. 9: Display and adjustment elements - with adjustment via magnetic pen

1 LC display
2 Magnetic pen
3 Adjustment keys
4 Bluetooth symbol
5 Lid with inspection window

Time functions

When the ***[+]*** and ***[->]*** keys are pressed quickly, the edited value, or the cursor, changes one value or position at a time. If the key is pressed longer than 1 s, the value or position changes continuously.

When the ***[OK]*** and ***[ESC]*** keys are pressed simultaneously for more than 5 s, the display returns to the main menu. The menu language is then switched over to "*English*".

Approx. 60 minutes after the last pressing of a key, an automatic reset to measured value indication is triggered. Any values not confirmed with ***[OK]*** will not be saved.

5 Parallel operation of display and adjustment modules

Depending on the generation as well as hardware version (HW) and software version (SW) of the respective sensor, parallel operation of the display and adjustment modules in the sensor and in the external display and adjustment unit is possible.

You can recognize the instrument generation by looking at the terminals. The differences are described below:

5.1 Sensors of the older generations

With the following hardware and software versions of the sensor, parallel operation of several display and adjustment modules is **not possible**:

- HW < 2.0.0, SW < 3.99

On these instruments, the interfaces for the integrated display and adjustment module and the external display and adjustment unit are connected internally. The terminals are shown in the following graphic:

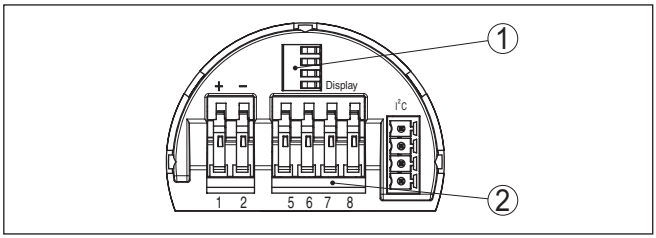

Fig. 10: Interfaces for display and adjustment

1 Spring contacts for display and adjustment module
2 Terminals for external display and adjustment unit

5.2 Sensors of the newer generation

With the following hardware and software versions of the sensors, parallel operation of several display and adjustment modules is **possible**:

- Radar sensors VEGAPULS 61, 62, 63, 65, 66, 67, SR68 and 68 with HW ≥ 2.0.0, SW ≥ 4.0.0 as well as VEGAPULS 64, 69
- Sensors with guided radar with HW ≥ 1.0.0, SW ≥ 1.1.0
- Pressure transmitter with HW ≥ 1.0.0, SW ≥ 1.1.0

On these instruments, the interfaces for the display and adjustment module and the external display and adjustment unit are separate:

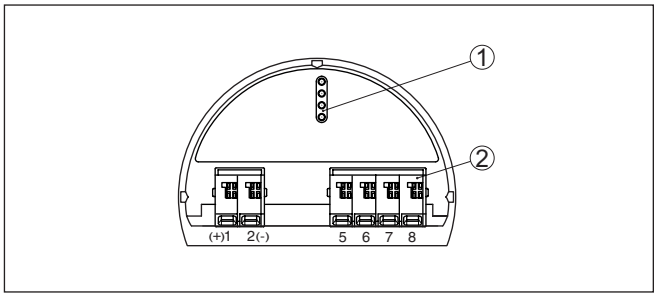

Fig. 11: Interfaces for display and adjustment

1 Spring contacts for display and adjustment module
2 Terminals for external display and adjustment unit

If the sensor is operated via the one display and adjustment module, the message "*Adjustment blocked*" appears on the other one. Simultaneous adjustment is thus impossible.

Connection of more than one display and adjustment module on one interface, or a total of more than two display and adjustment modules, however, is not supported.

6 Set up Bluetooth connection with smartphone/tablet

6.1 Preparations

System requirements

Make sure that your smartphone/tablet meets the following system requirements:

- Operating system: iOS 8 or newer
- Operating system: Android 4.3 or newer
- Bluetooth Smart from 4.0

Download the app "VEGA Tools" from the Apple App Store, Google Play Store or Baidu App Store to your smartphone or tablet.

Activate Bluetooth

Make sure that the Bluetooth function of the display and adjustment module is activated. For this, the switch on the bottom side must be set to "*On*".

Factory setting is "**On**".

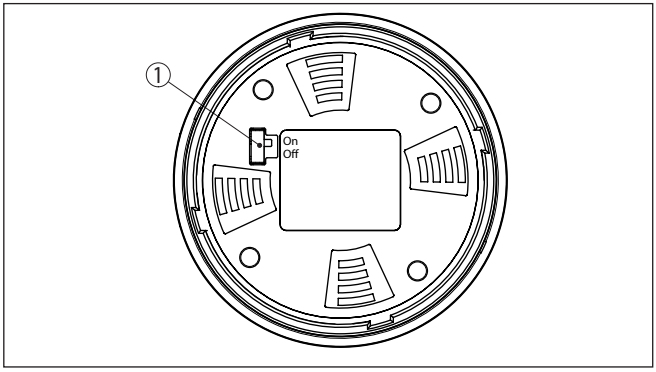

Fig. 12: Activate Bluetooth

1 Switch
On = Bluetooth active
Off = Bluetooth not active

Change sensor PIN

The security concept of Bluetooth operation absolutely requires that the default setting of the sensor PIN be changed. This prevents unauthorized access to the sensor.

The default setting of the sensor PIN is "**0000**". First of all you have to change the sensor PIN in the adjustment menu of the respective sensor, e.g. to "**1111**".

After the sensor PIN has been changed, sensor adjustment can be enabled again. For access (authentication) with Bluetooth, the PIN is still effective.

With VEGAPULS 64 and 69, VEGAFLEX and VEGABAR 80 series this is as follows:

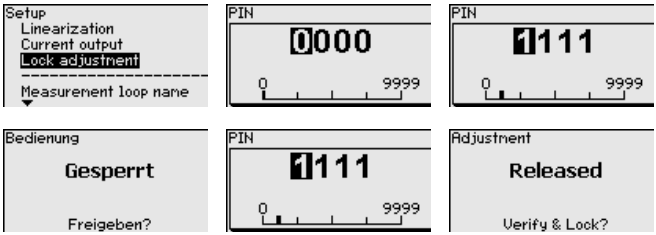

Information:
Bluetooth communication functions only if the actual sensor PIN differs from the default setting "**0000**".

6.2 Connecting

Connecting …

Start the app and select the function "Setup". The smartphone/tablet searches automatically for Bluetooth-capable instruments in the area.

The message "*Searching …*" is displayed.

All found instruments will be listed in the adjustment window. The search is continued automatically.

Select the requested instrument in the device list.

The message "*Connecting …*" is displayed.

Authenticate

For the first connection, the operating device and the sensor must authenticate each other. After successful authentication, the next connection functions without authentication.

iOS
During the pairing process, the following message is displayed: "*Pairing request (Bluetooth), e.g. 12345678 wants to pair with your iPad*". Press "Pair".

For authentication, enter in the next menu window the 4-digit PIN which is used to Lock/Unlock the sensor (sensor PIN).

Android
The pairing runs automatically. For authentication, enter the 4-digit PIN which is used to Lock/Unlock the sensor (sensor PIN).

Note:
If an incorrect sensor PIN is entered, the PIN can only be entered again after a delay time. This time gets longer after each incorrect entry.

The message "*Waiting for authentication*" is displayed on the smartphone/tablet.

Connected

After connection, the sensor adjustment menu appears on the respective operating device. The display of the display and adjustment module shows the Bluetooth symbol and "*connected*" with sensors of the later generation. Sensor adjustment via the keys of the display and adjustment module itself is not possible in this mode.

With sensors of the older generation, the display remains unchanged, sensor adjustment via the keys of the display and adjustment module is possible.

If the connection is interrupted, e.g. due to a too large distance between sensor and operating device, the message "*Communication failure*" is displayed on the operating device. The message disappears when the connection is restored.

6.3 Sensor parameter adjustment

Enter parameters

The sensor adjustment menu is divided into two halves:

On the left you'll find the navigation section with the menus "*Setup*", "*Display*", "*Diagnosis*" and others.

The selected menu item, recognisable by the colour change, is displayed in the right half.

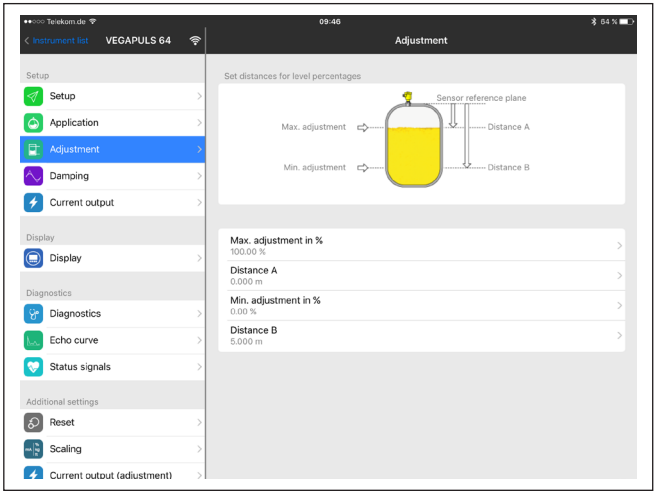

Fig. 13: Example of an app view - Setup sensor adjustment

Enter the requested parameters and confirm via the keyboard or the editing field. The settings are then active in the sensor.

Close the app to terminate connection.

7 Set up Bluetooth connection with PC/notebook

7.1 Preparations

System requirements

Make sure that your PC meets the following system requirements:

- Operating system Windows
- DTM Collection 03/2016 or higher
- USB 2.0 interface
- Bluetooth USB adapter

Activate Bluetooth USB adapter

Activate the Bluetooth USB adapter via the VEGA project assistant (see supplementary instructions "*Bluetooth USB adapter*"). Sensors with Bluetooth capable PLICSCOM will be found and a project tree created.

Activate Bluetooth

Make sure that the Bluetooth function of the display and adjustment module is activated. For this, the switch on the bottom side must be set to "*On*".

Factory setting is "*On*".

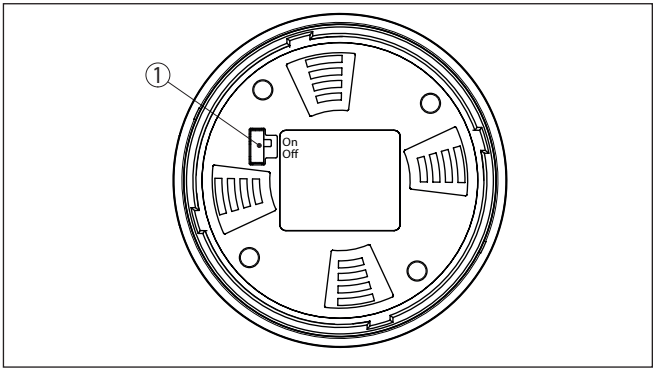

Fig. 14: Activate Bluetooth

1 Switch
on Bluetooth active
off Bluetooth not active

Change sensor PIN

The security concept of Bluetooth operation absolutely requires that the default setting of the sensor PIN be changed. This prevents unauthorized access to the sensor.

The default setting of the sensor PIN is "**0000**". First of all you have to change the sensor PIN via the DTM of the respective sensor, e.g. to "**1111**".

The sensor can be released after the sensor PIN has been changed.

This is as follows for sensors of the newer generation:

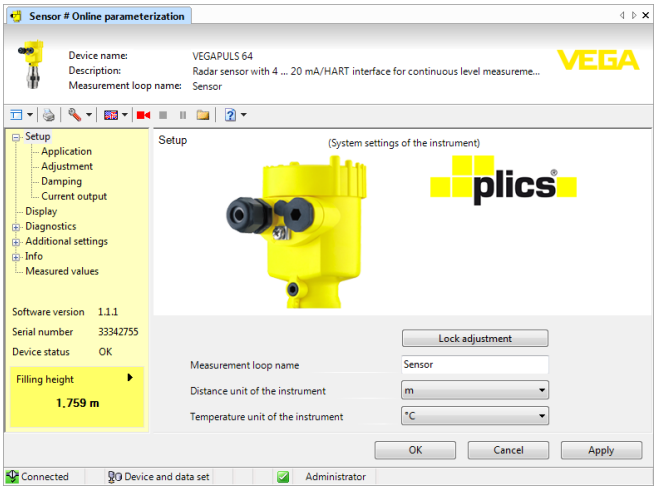

Fig. 15: Example of a DTM view - Online parameter adjustment

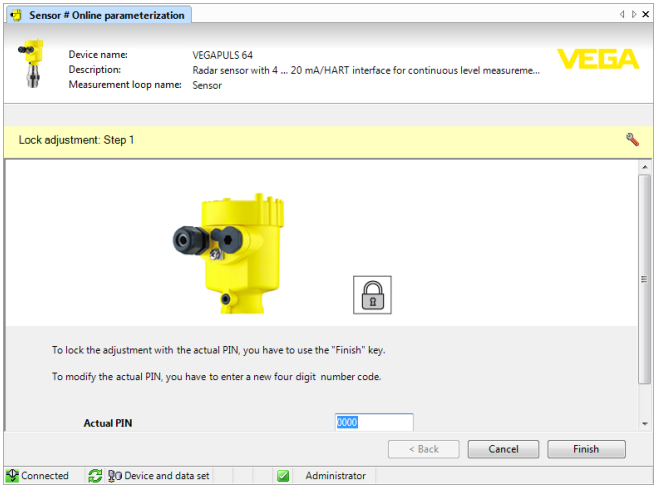

Fig. 16: DTM view - Lock adjustment/Change the sensor PIN

Information:
Bluetooth communication functions only if the actual sensor PIN differs from the default setting "**0000**".

7.2 Connecting

Connecting …

Select the requested sensor for the online parameter adjustment in the project tree.

Authenticate

The window "*Authentication*" is displayed. For the first connection, the operating device and the sensor must authenticate each other.

After successful authentication, the next connection functions without authentication. For authentication you have to enter the 4-digit PIN which is used for locking/unlocking the sensor (sensor PIN).

Note:
If an incorrect sensor PIN is entered, the PIN can only be entered again after a delay time. This time gets longer after each incorrect entry.

Connected

After connection, the sensor DTM appears. With sensors of the newer generation, the display of the display and adjustment module shows the Bluetooth symbol and "*connected*". Sensor adjustment via the keys of the display and adjustment module itself is not possible in this mode.

With sensors of the older generation, the display remains unchanged, sensor adjustment via the keys of the display and adjustment module is possible.

If the connection is interrupted, e.g. due to a too large distance between sensor and PC/notebook, the message "*Communication failure*" is displayed. The message disappears when the connection is restored.

7.3 Parameter adjustment

Prerequisites

For parameter adjustment of the instrument via a Windows PC, the configuration software PACTware and a suitable instrument driver (DTM) according to FDT standard are required. The latest PACTware version as well as all available DTMs are compiled in a DTM Collection. The DTMs can also be integrated into other frame applications according to FDT standard.

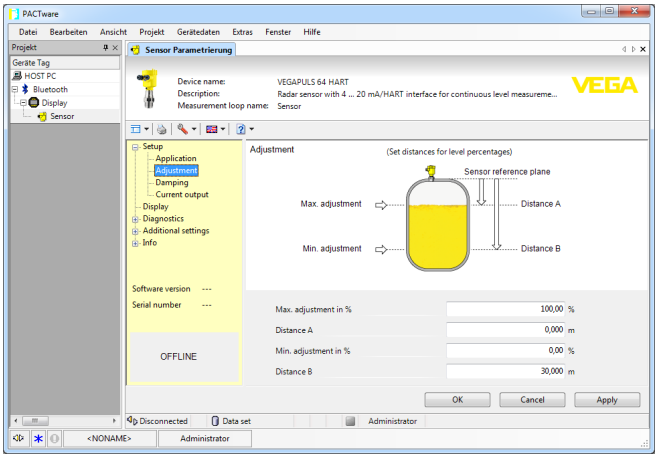

Fig. 17: Example of a DTM view - Setup, sensor adjustment

8 Maintenance and fault rectification

8.1 Maintenance

Maintenance

If the instrument is used correctly, no maintenance is required in normal operation.

Cleaning

The cleaning helps that the type label and markings on the instrument are visible.

Take note of the following:

- Use only cleaning agents which do not corrode the housings, type label and seals
- Use only cleaning methods corresponding to the housing protection rating

8.2 How to proceed if a repair is necessary

You can find an instrument return form as well as detailed information about the procedure in the download area of our homepage: www.vega.com. By doing this you help us carry out the repair quickly and without having to call back for needed information.

In case of repair, proceed as follows:

- Print and fill out one form per instrument
- Clean the instrument and pack it damage-proof
- Attach the completed form and, if need be, also a safety data sheet outside on the packaging
- Ask the agency serving you to get the address for the return shipment. You can find the agency on our home page www.vega.com.

9 Dismount

9.1 Dismounting steps



Warning:
Before dismounting, be aware of dangerous process conditions such as e.g. pressure in the vessel or pipeline, high temperatures, corrosive or toxic products etc.

Take note of chapters "*Mounting*" and "*Connecting to power supply*" and carry out the listed steps in reverse order.

9.2 Disposal

The instrument consists of materials which can be recycled by specialised recycling companies. We use recyclable materials and have designed the electronics to be easily separable.

Materials: see chapter "*Technical data*"

For disposal or recycling within the European Union proceed according to the "*Electronics recycling*" and "*Battery/Accumulator recycling*" below. Outside the European Union you should take note of the valid national regulations.

Electronics recycling
This instrument is not subject to the WEEE directive 2012/19/EU and the respective national laws. Hence pass the instrument directly on to a specialised recycling company and do not use the municipal collecting points. These may be used only for privately used products according to the WEEE directive.

Battery/accumulator recycling



Note:
The disposal is subject to the directive 2006/66/EG on batteries and accumulators.

Batteries and accumulators contain some environmentally harmful but also some valuable raw materials that can be recycled. For that reason batteries and accumulators must not be disposed of in household waste.

All users are legally obligated to bring spent batteries to a suitable collection point, e.g. public collection points. You can also return the batteries and accumulators to us for correct disposal. Due to the very strict transport regulations for lithium-based batteries/accumulators, this is normally not a good idea because shipment is very expensive.

Correct disposal avoids negative effects on humans and the environment and ensures recycling of useful raw materials.

10 Supplement

10.1 Technical data

General data	
Weight	approx. 150 g (0.33 lbs)

Display and adjustment module	
Display element	Display with backlight
Measured value indication	
– Number of digits	5
Adjustment elements	
– 4 keys	***[OK]***, ***[->]***, ***[+]***, ***[ESC]***
– Switch	Bluetooth On/Off
Bluetooth interface	
– Standard	Bluetooth smart
– Effective range	25 m (82.02 ft)
Protection rating	
– unassembled	IP 20
– mounted in the housing without lid	IP 40
Materials	
– Housing	ABS
– Inspection window	Polyester foil
Functional safety	SIL non-reactive

Ambient conditions	
Ambient temperature	-20 … +70 °C (-4 … +158 °F)
Storage and transport temperature	-40 … +80 °C (-40 … +176 °F)

10.2 Dimensions

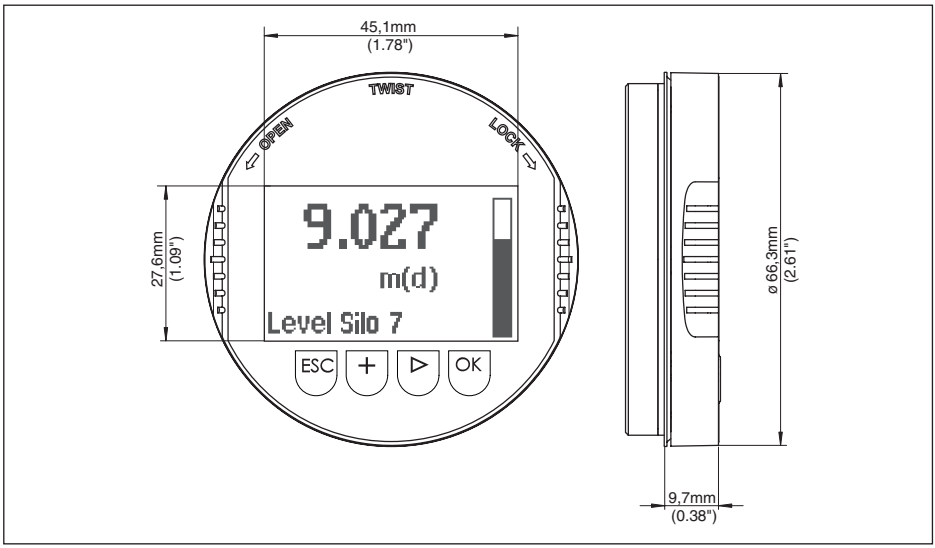

Fig. 18: Dimensions of display and adjustment module

10.3 Industrial property rights

VEGA product lines are global protected by industrial property rights. Further information see www.vega.com.

VEGA Produktfamilien sind weltweit geschützt durch gewerbliche Schutzrechte.

Nähere Informationen unter www.vega.com.

Les lignes de produits VEGA sont globalement protégées par des droits de propriété intellectuelle. Pour plus d'informations, on pourra se référer au site www.vega.com.

VEGA lineas de productos están protegidas por los derechos en el campo de la propiedad industrial. Para mayor información revise la pagina web www.vega.com.

Линии продукции фирмы ВЕГА защищаются по всему миру правами на интеллектуальную собственность. Дальнейшую информацию смотрите на сайте www.vega.com.

VEGA系列产品在全球享有知识产权保护。

进一步信息请参见网站<www.vega.com。

10.4 Hash function acc. to mbed TLS

mbed TLS: Copyright (C) 2006-2015, ARM Limited, All Rights Reserved SPDX-License-Identifier: Apache-2.0

Licensed under the Apache License, Version 2.0 (the "License"); you may not use this file except in compliance with the License. You may obtain a copy of the License at http://www.apache.org/licenses/LICENSE-2.0.

Unless required by applicable law or agreed to in writing, software distributed under the License is distributed on an "AS IS" BASIS, WITHOUT WARRANTIES OR CONDITIONS OF ANY KIND, either express or implied. See the License for the specific language governing permissions and limitations under the License.

10.5 Trademark

All the brands as well as trade and company names used are property of their lawful proprietor/ originator.

Printing date:

All statements concerning scope of delivery, application, practical use and operating conditions of the sensors and processing systems correspond to the information available at the time of printing.
Subject to change without prior notice

© VEGA Grieshaber KG, Schiltach/Germany 2018

36433-EN-180221

VEGA Grieshaber KG
Am Hohenstein 113
77761 Schiltach
Germany

Phone +49 7836 50-0
Fax +49 7836 50-201
E-mail: info.de@vega.com
www.vega.com