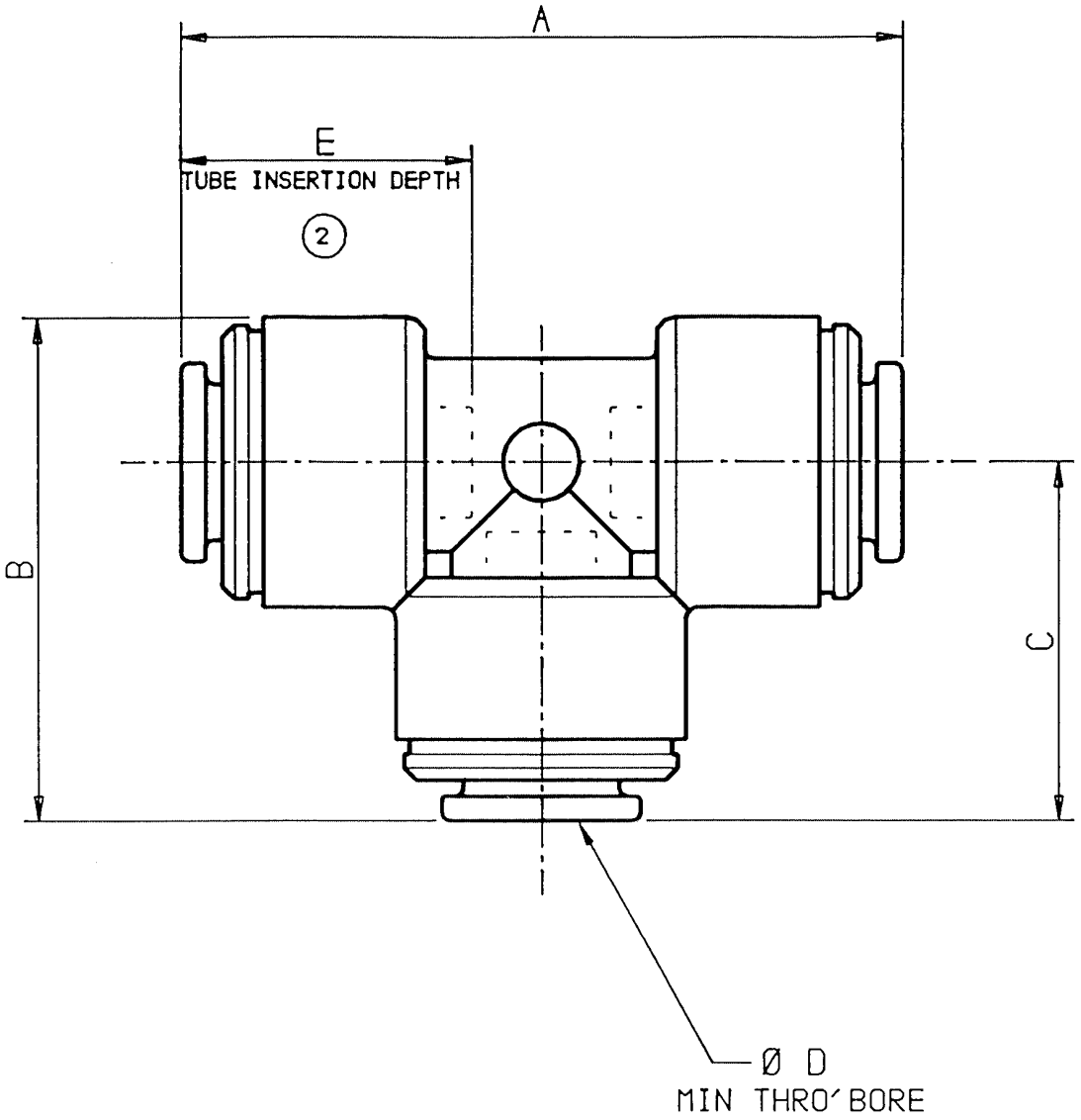

PRODUCT NO.	DESCRIPTION	A	B	C	Ø D	E
PM0204E	4MM TUBE O.D.	35	24	18	2.5	14.3
PM0205E	5MM TUBE O.D.	35	24	18	3.5	14.3
PM0206E	6MM TUBE O.D.	40	27	20	5.0	15.7
PM0208E	8MM TUBE O.D.	42	30	21	6.5	16.7
PM0210E	10MM TUBE O.D.	50	35	25	7.5	19.7
PM0212E	12MM TUBE O.D.	65	44	32	8.5	24.7
PM0215E	15MM TUBE O.D.	73	50	37	12.0	28.7

ALL DIMENSIONS IN MM

RELEASE No. C-0686-SALE

John Guest

THE COPYRIGHT HEREIN BELONGS TO JOHN GUEST LIMITED. THE INFORMATION GIVEN MUST NOT BE REPRODUCED WITHOUT WRITTEN CONSENT. © 1992

PRODUCT DATA SHEET DS-120

TITLE EQUAL TEE CONNECTORS (P RANGE)

ISSUE 2

DATE 26/08/92

JGE FORM 103/DS Issue 1

Location: CCL-SA-SPE01
Release Number: 000000-C-FILX
CURRENT PRODUCTION
User: roses
Printed/Downloaded: 3 Mar 10,14:04
UNCONTROLLED IF PRINTED OR DOWNLOADED