Brand of NTN corporation



Technical data

6206E

Single row deep groove ball bearings

Deep groove ball bearing, radial contact, pressed steel cage, contact seal on one side

VISUAL (S)

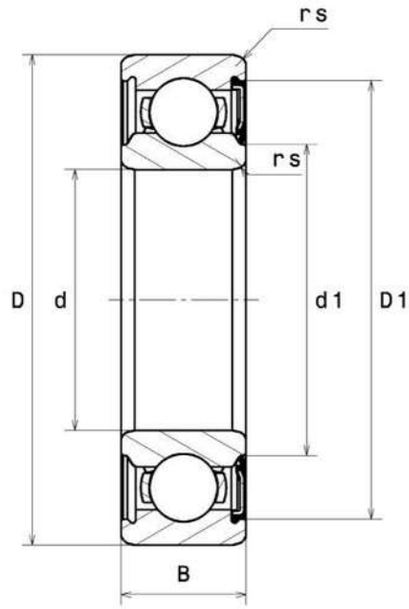

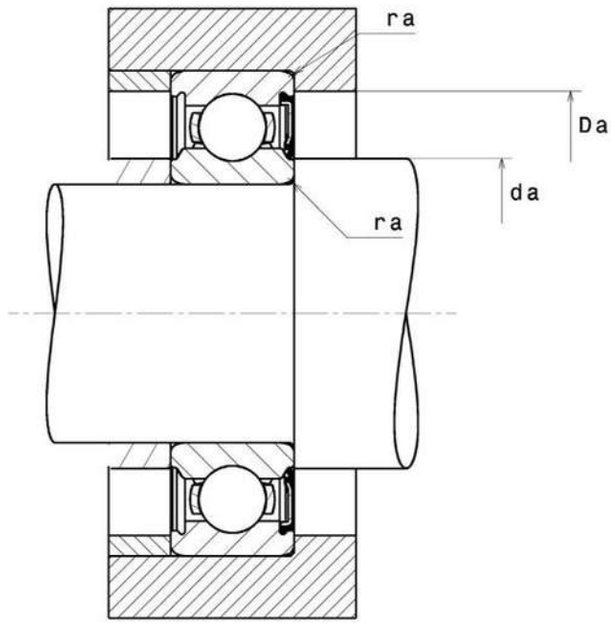

NTN Europe
1 rue des Usines · BP 2017 · 74010 Annecy Cedex · France · Tel. +33 (0)4 50 65 30 00
S.A. au capital de 322 639 919 € · RCS ANNECY B 325 821 072 · Id. Fiscale : FR 48 325 821 072
SIRET 325 821 072 00015 · Code APE 2815 Z · Code NACE 28.15

6206E
Single row deep groove ball bearings

PRODUCT DEFINITION	
Brand	SNR
d - Internal diameter	30 mm
D - External diameter	62 mm
B - Bearing/Inner ring width	16 mm
d1 - External diameter inner ring	37,9 mm
D1 - Inner diameter outer ring	55,1 mm
rs - Min fillet radius	1 mm
Radial clearance class	CN
Mass	0,199 kg

PRODUCT PERFORMANCE	
C - Dynamic load	20500000 mN
C0 - Static load	11300000 mN
Cu - Fatigue limit load	510000 mN
f0 - Coefficient	13.8
N lim - Mechanical Limit Speed	45600 °/s
Tmin - Min operating temperature	243,15 °K
Tmax - Max operating temperature	393,15 °K

BEARING FREQUENCIES	
BPFO - Over rolling frequency on outer ring (60 rpm)	3.568 Hz
BPFI - Over rolling frequency on inner (60 rpm)	5.432 Hz
BSF - Over rolling frequency on rolling element (60 rpm)	4.622 Hz
BRF - Rotational frequency – rolling element (60 rpm)	2.311 Hz
FTF - Rotational frequency - cage (60 rpm)	0.396 Hz

ABUTMENT

da min - Min shoulder diameter IR	35 mm
da max - Max shoulder diameter IR	118,9 mm
Da max - Max shoulder diameter OR	57 mm
ra max - Max shaft & housing fillet radius	1 mm

INDUSTRY CALCUL FACTORS

Equivalent dynamic radial load

P = X.Fr + Y.Fa

$\frac{f_0 F_a}{C_0}$	e	Fa / Fr ≤ e		Fa / Fr > e	
		X	Y	X	Y
0.172	0.19	1	0	0.56	2.3
0.345	0.22				1.99
0.689	0.26				1.71
1.03	0.28				1.55
1.38	0.3				1.45
2.07	0.34				1.31
3.45	0.38				1.15
5.17	0.42				1.04
6.89	0.44				1

Equivalent static radial load

Po = Xo.Fr + Yo.Fa

X_0	Y_0
0.6	0.5

For single or DT bearing arrangement :

If Po <Fr, then use Po = Fr