

G6 Hinge

Position control · Detent

- **Holds doors open without secondary mechanical support**
- **Detent holds door at 120° and 170°**
- **Can be opened to 180°**

Material and Finish

Acetal and nylon, black

Performance Details

Radial load:
Maximum static load: 130 N (30 lbf)
Average ultimate load:
970 N (220 lbf)

Axial load:
Maximum static load: 130 N (30 lbf)
Average ultimate load:
1450 N (325 lbf)

Cycle life: 10,000 cycles

Operating temperature range:
-20 °C (0° F) to 80° C (180° F)

Installation Notes

Screws not supplied

Hinge designed to accommodate M4 (No. 8) size Pan Head mounting hardware.

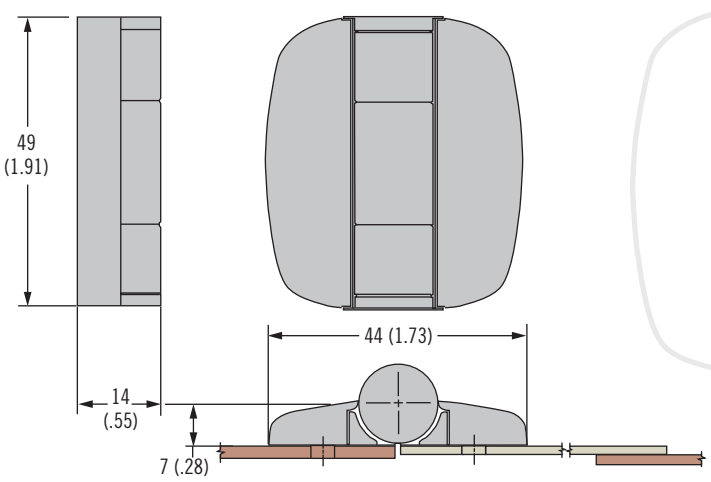

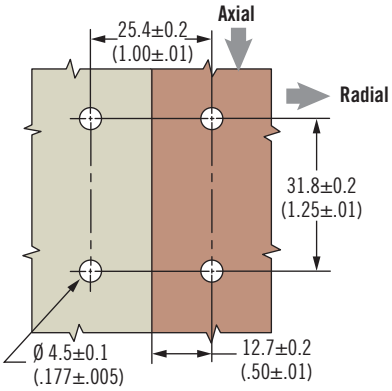

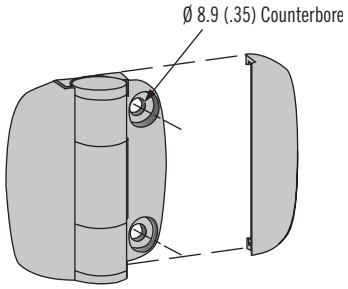

Part Number

See table

Part Number	Detent Angle	Positioning Torque
G6-0-1	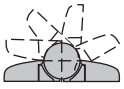 Free swinging (no detents)	~
G6-5-1	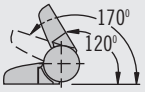	1.1 N•m (10 in•lbf)

Other options available. For complete details on variety, part numbers, installation and specification, go to

INFO CLIC *www.southco.com/G6*

Dimensions in millimeters (inch) unless otherwise stated