Max. 155 m³/h

DC tangential fans

201...413 x 50 x 48 mm

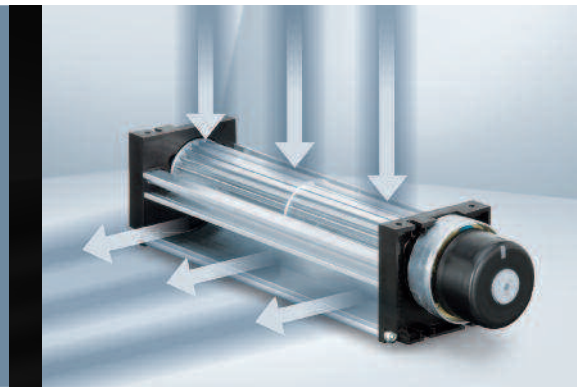

- **Material:** Housing: Aluminum
  Housing side parts: Plastic
  Impeller: Aluminum
- **Direction of air flow:** See photo
- **Connection:** via single wires AWG 24, TR 64
- **Highlights:** Motor with ball bearing system
  Impeller retaining plate with sleeve bearing
- **Weight:** 235 / 290 / 380 / 415 g

- **Possible special versions:**
  (See chapter DC fans - specials)
  - Speed signal
  - Moisture protection

Series QG 030 **Nominal data**	Air flow	Air flow	**Nominal voltage**	Voltage range	Sound pressure level	Sound power level	Sintec sleeve bearings Ball bearings	Power consumption	Temperature range	Service life L_{10} (40 °C) ebm-papst standard Service life L_{10} (T_{max}) ebm-papst standard	Life expectancy L_{10IPC} (40 °C) see page 17	Curve
Type	**m³/h**	**cfm**	**VDC**	**VDC**	**db(A)**	**Bel(A)**	□/■	**Watts**	**°C**	**Hours**	**Hours**	
QG 030-148/12	75	44	**12**	8...14	49	5.7	□/■	6.2	-20...+60	30 000 / 20 000	50 000	①
QG 030-198/12	100	59	**12**	8...14	51	5.8	□/■	8,0	-20...+60	30 000 / 20 000	50 000	②
QG 030-303/12	140	82	**12**	8...14	51	5.8	□/■	8.7	-20...+60	30 000 / 20 000	50 000	③
QG 030-353/12	155	91	**12**	8...14	51	5.9	□/■	9.6	-20...+60	30 000 / 20 000	50 000	④
QG 030-148/14	75	44	**24**	16...28	49	5.7	□/■	6.2	-20...+60	30 000 / 20 000	50 000	①
QG 030-198/14	100	59	**24**	16...28	51	5.8	□/■	8.0	-20...+60	30 000 / 20 000	50 000	②
QG 030-303/14	140	82	**24**	16...28	51	5.8	□/■	8.7	-20...+60	30 000 / 20 000	50 000	③
QG 030-353/14	155	91	**24**	16...28	51	5.9	□/■	9.6	-20...+60	30 000 / 20 000	50 000	④

Subject to change

The values for service life were recorded with the fan installed horizontally.

Type Dimension:	L	L_1	Mass
QG 030-148/ ..	203.4 $^{+1.5}$	148	235 g
QG 030-198/ ..	260.4 $^{+1.5}$	198	290 g
QG 030-303/ ..	365.4 $^{+1.5}$	303	380 g
QG 030-353/ ..	415.4 $^{+1.5}$	353	415 g

------ Tangential fans are suitable only for operation with high air flow and low back-pressure.

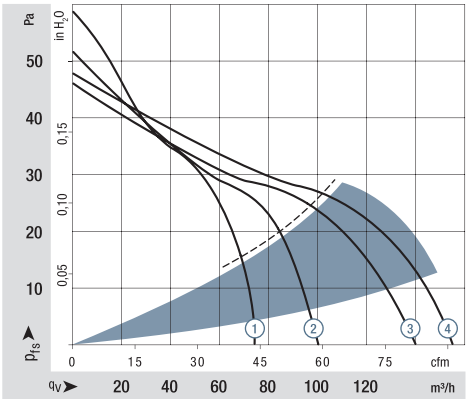

Air performance measured according to: ISO 5801.
Installation category A, without contact protection.
Noise: Total sound power level LWA ISO 103002 measured on a hemisphere with a radius of 2 m.
Sound pressure level LpA measured at 1 m distance to fan axis.
The values given are applicable only under the specified measuring conditions and may differ depending on the installation conditions.
In the event of deviation from the standard configuration, the parameters must be checked after installation!
For detailed information see http://www.ebmpapst.com/general conditions

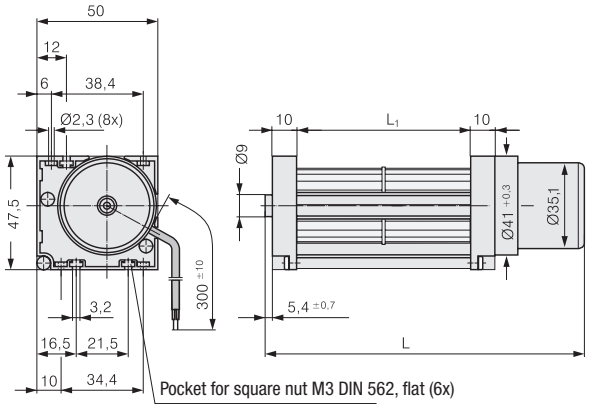

ebmpapst