

Image may differ from product. See technical specification for details.

KMT 18

Precision lock nut with locking pins

KMT precision lock nuts are intended for applications where high precision, simple assembly and reliable locking are required. The three equally-spaced locking pins enable these lock nuts to be accurately positioned at right angles to the shaft. However, they can

also be adjusted to compensate for slight angular deviations of adjacent components.
Maximum axial run-out between the locating face and thread (up to size 40): 0.005 mm

- No keyway required
- Withstands high axial loads
- Reliable, effective locking mechanism
- Designed for frequent and simple installation and removal
- Available for thread M 10x0.75 to M 200x3 (sizes 0 to 40) and Tr 220x4 to Tr 420x5 (sizes 44 to 84)

Overview

Dimensions

Thread designation	M 90x2
Bore diameter	90 mm
Outside diameter	125 mm
Width	32 mm

Properties

Locking device	Incorporated in the lock nut
Nut for hydraulic mounting	No
Associated mounting tool	HN 18-20

Logistics

Product net weight	1.22 kg
eClass code	23-11-07-05
UNSPSC code	31163218

Technical specification

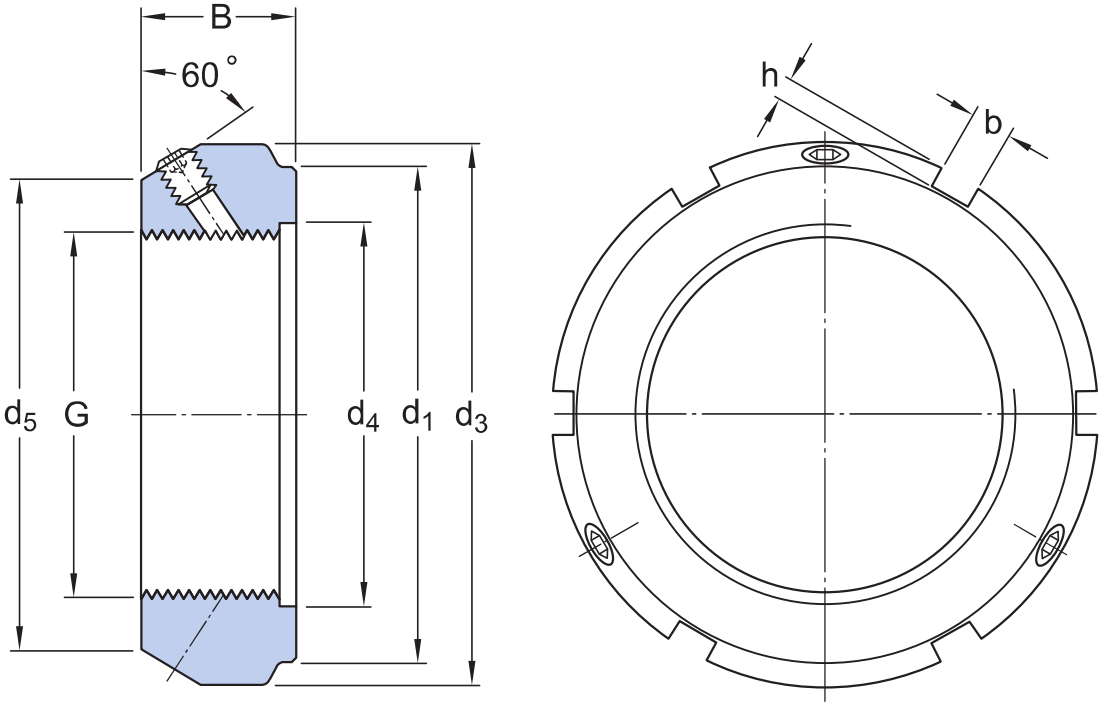

Dimensions

G	M 90x2	Thread
d_1	115 mm	Outside diameter locating side face
B	32 mm	Width
d_3	125 mm	Outside diameter
d_4	92 mm	Inner diameter locating side face
d_5	112 mm	Diameter side face opposite to bearing
b	10 mm	Width locating slot
h	4 mm	Depth locating slot

Calculation data

Axial static load carrying capacity	680 kN

Mounting information

Associated spanner (Hook spanner in accordance with DIN 1810)	HN 18-20
Set / Locking screw size	M10

Recommended tightening torque	35 N·m

Compatible products

Recommended tool

Hook spanner, size 18-20	HN 18-20
Hook spanner for use inside split plummer (pillow) block housings, size 19	HN 19/SNL
Adjustable hook spanner, size 14-24	HNA 14-24

More Information

Product details

Precision lock nuts

Engineering information

General bearing knowledge

Bearing selection process

Bearing failure and how to prevent it

Terms of use

By accessing and using this website / app owned and published by AB SKF (publ.) (556007-3495 · Gothenburg) (“SKF”), you agree to the following terms and conditions:

Warranty Disclaimer and Limitation of Liability
Although every care has been taken to assure the accuracy of the information on this website / app, SKF provides this information "AS IS" and DISCLAIMS ALL WARRANTIES, EXPRESS OR IMPLIED, INCLUDING, BUT NOT LIMITED TO, IMPLIED WARRANTIES OF MERCHANTABILITY AND FITNESS FOR A PARTICULAR PURPOSE. You acknowledge that your use of this website / app is at your sole risk, that you assume full responsibility for all costs associated with use of this website / app, and that SKF shall not be liable for any direct, incidental, consequential, or indirect damages of any kind arising out of your access to, or use of the information or software made available on this website / app.

Any warranties and representations in this website / app for SKF products or services that you purchase or use will be subject to the agreed upon terms and conditions in the contract for such product or service.

Further, for non-SKF websites / apps that are referenced in our website / app or where a hyperlink appears, SKF makes no warranties concerning the accuracy or reliability of the information in these websites / apps and assumes no responsibility for material created or published by third parties contained therein. In addition, SKF does not warrant that this website / app or these other linked websites / apps are free from viruses or other harmful elements.

Third Party Services
When viewing YouTube content via the SKF website(s) (i.e. using YouTube API Services), you agree to be bound by the YouTube Terms of Service.

Copyright
Copyright in this website / app copyright of the information and software made available on this website / app rest with SKF or its licensors. All rights are reserved. All licensed material will reference the licensor that has granted SKF the right to use the material. The information and software made available on this website / app may not be reproduced, duplicated, copied, transferred, distributed, stored, modified, downloaded or otherwise exploited for any commercial use without the prior written approval of SKF. However, it may be reproduced, stored and downloaded for use by individuals without prior written approval of SKF. Under no circumstances may this information or software be supplied to third parties.

This website /app includes certain images used under license from Shutterstock, Inc.

Trademarks and Patents
All trademarks, brand names, and corporate logos displayed on the website / app are the property of SKF or its licensors, and may not be used in any way without prior written approval by SKF. All licensed trademarks published on this website / app reference the licensor that has granted SKF the right to use the trademark. Access to this website / app does not grant to the user any license under any patents owned by or licensed to SKF.

Changes
SKF reserves the right to make changes or additions to this website / app at any time.