HENGSTLER

TECHNICAL DATASHEET

Incremental Encoder RI64



- Through hollow shaft and hub shaft up to 16 mm
- Up to 20,000 steps with 5,000 pulses
- Robust design
- High shock and vibrations resistance
- Electrically insulated shaft: protection from shaft currents
- Wide operating temperature range of -40°C … +100°C
- Wide power supply range DC 5-26 V
- Protection class up to IP67

CE

NUMBER OF PULSES

1000 / 1024 / 2000 / 2048 / 4096

TECHNICAL DATA
mechanical

Housing diameter	63 mm
Mounting depth	54 mm
Shaft diameter	10 mm / 12 mm / 14 mm / 15 mm / 16 mm (Hub shaft) 12 mm / 14 mm / 15 mm / 16 mm (Through hollow shaft)
Flange (Mounting of housing)	Tether
Mounting of shaft	Front clamping ring, Rear clamping ring
Protection class shaft input (EN 60529)	IP64 or IP67
Protection class housing (EN 60529)	IP64 or IP67
Axial endplay of mounting shaft	± 0,8 mm
Radial runout of mating shaft	± 0,2 mm
Max. speed	Hub shaft: max. 12.000 rpm Through hollow shaft: max. 6.000 rpm
Vibration resistance (DIN EN 60068-2-6)	200 m/s² (10 … 2000 Hz)
Shock resistance (DIN EN 60068-2-27)	2000 m/s² (6ms)
Operating temperature	-40 °C ... +100 °C
Storage temperature	-40 °C ... +100 °C
Material shaft	Aluminum, ceramic coating
Material housing	Aluminum
Weight	approx. 245 g
Connection	Cable, axial or radial Cable with M23 connector

TECHNICAL DATASHEET

Incremental Encoder RI64

TECHNICAL DATA
electrical

Supply voltage	DC 5 V ±10 % DC 5 - 26 V
Max. pulse frequency	300 kHz (data and index)
Standard output versions	RS422 (T): A, B, Z, $\overline{A}$, $\overline{B}$, $\overline{Z}$ Push-pull complementary (I): A, B, Z, $\overline{A}$, $\overline{B}$, $\overline{Z}$
Number of pulses	1000 / 1024 / 2000 / 2048 / 4096
Index pulse width	180° electrical
Pulse shape	Square wave

ELECTRICAL CONNECTIONS

M23 connector, 12 pole
Cable PVC

Colour	PIN	Signal
red	12	DC 5 / 5-26 V
black	10	GND
blue	5	Channel A
green	8	Channel B
violet	3	Channel Z
blue/ black	6	Channel $\overline{A}$
green/ black	1	Channel $\overline{B}$
violet/ black	4	Channel $\overline{Z}$
Screen		Screen

SIGNAL FORMAT

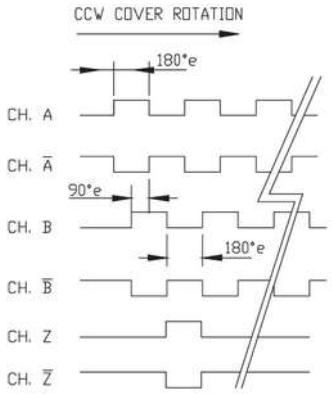

DIMENSIONED DRAWINGS

Through hollow shaft - IP64

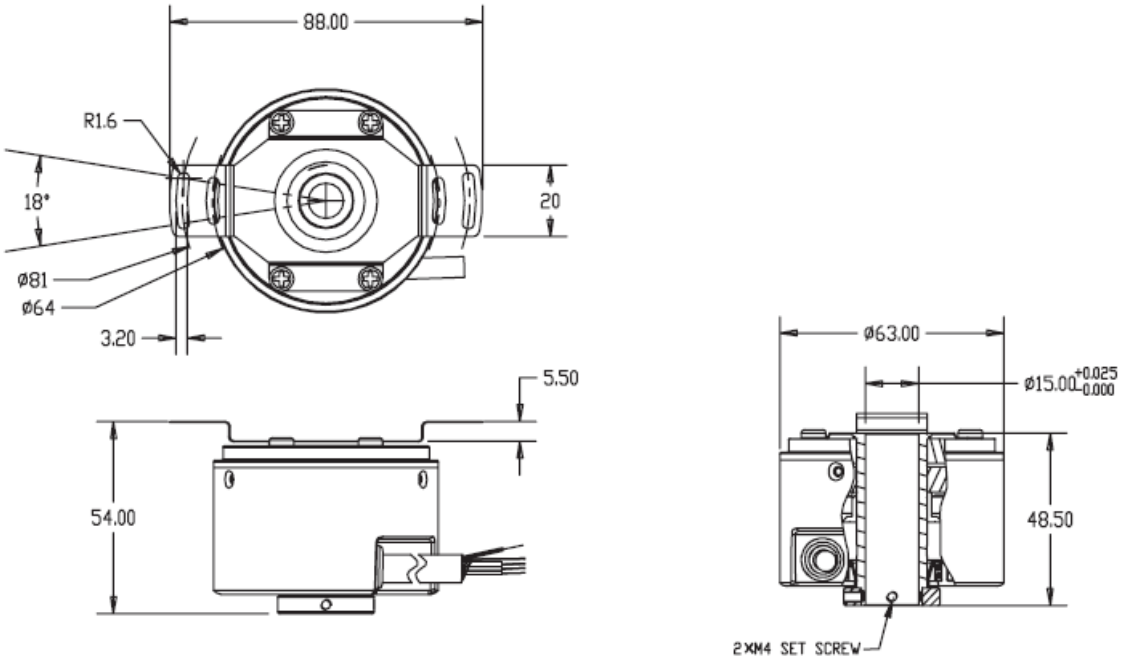

Through hollow shaft - IP67

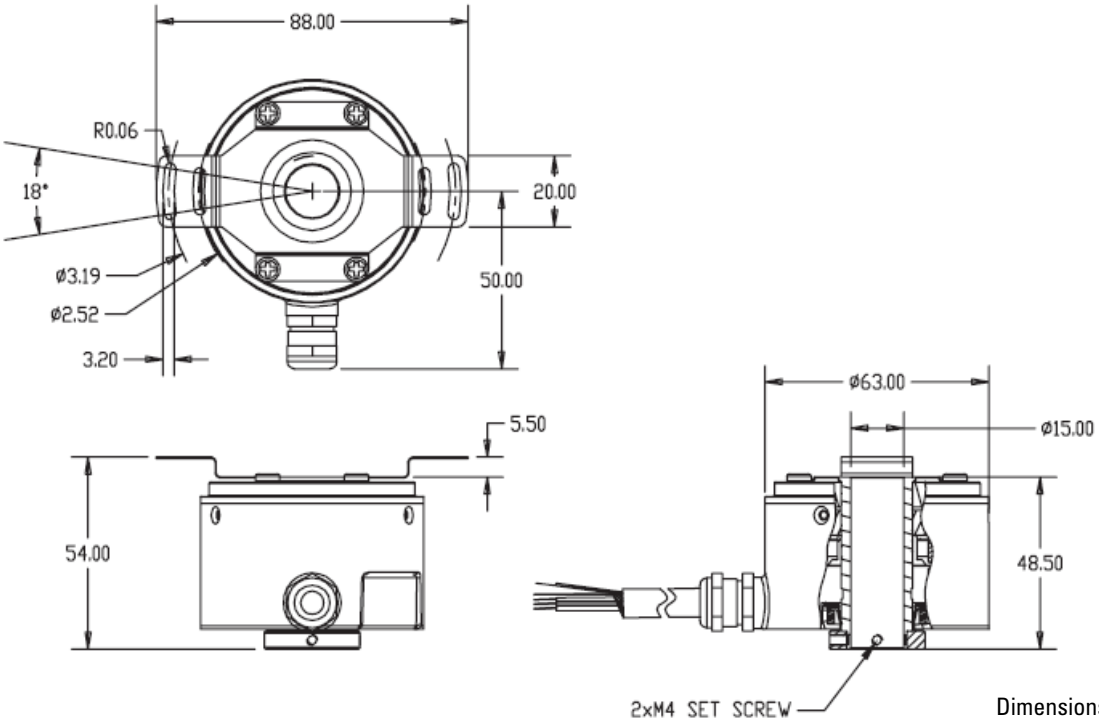

Dimensions in mm

DIMENSIONED DRAWINGS
(continued)

Hub shaft - IP67

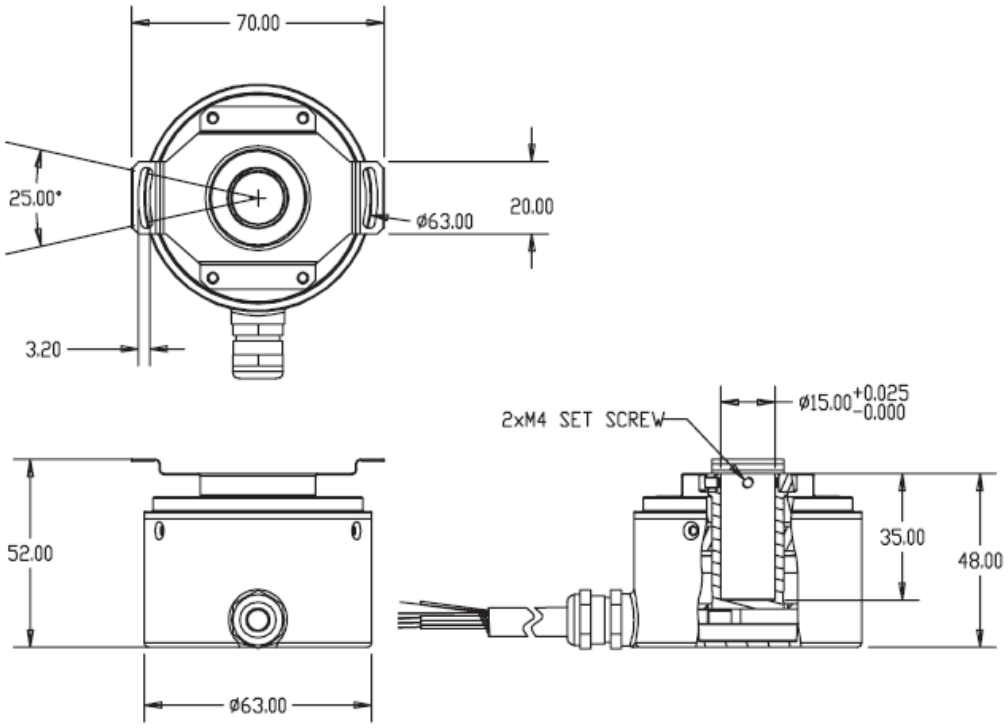

Hub shaft - IP64

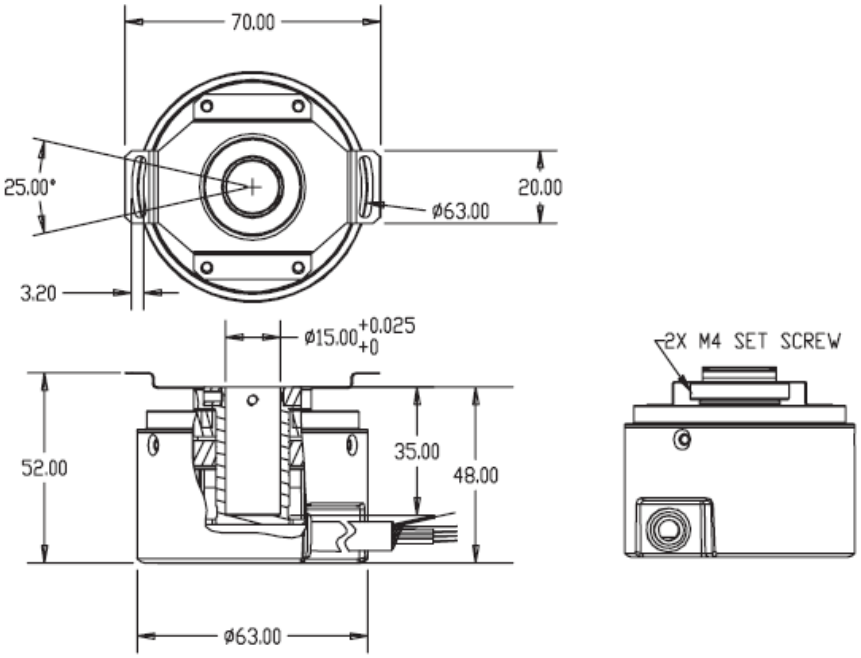

Dimensions in mm

Incremental Encoder RI64

ORDERING INFORMATION

Type	Pulses	Supply voltage	Tether	Pro-tection	Shaft mounting	Shaft diameter	Output	Connection	Cable length	Connector on cable end
RI64	**1000** **1024** **2000** **2048** **4096**	**A** DC 5V [1] **B** DC 5 - 26V [2]	**V** 63 **W** 81/64 **O** without tether	**4** IP64 **7** IP67	**F** hub shaft with clamp-ing front **H** Through hollow shaft with clamp-ing ring rear	**2** 10 mm **7** 12 mm **9** 14 mm **D** 15 mm **G** 16 mm	**T** RS422 **I** Push-pull complementary	**B** PVC cable radial	**-B5** 1,5m (standard length) **-A5** 0,5 m **-D0** 3 m **-F0** 5 m **-K0** 10 m **-P0** 15 m **-U0** 20 m **-V0** 25 m	**-O** no connector **-I** M23 connector cw **-D** M23 connector ccw

[1] DC 5 V only available with output T
[2] DC 5 –26 V only available with output I

Specifications subject to change without notice