Speed signal /2

- Speed-proportional, square-wave signal for external monitoring of the fan motor speed
- 2, 3, or 6 pulses per revolution
- Open-collector signal output
- Extremely wide operating voltage range
- Easy adaptation to user interface
- Connection via separate cable
- The sensor signal also serves as a major comparison variable for setting and maintaining the setpoint speed for interactive or controlled cooling with one or more interconnected fans.

Available on request:
- Electrically isolated speed signal circuit
- Varying voltage potentials for power and logic circuit

Electrical hookup

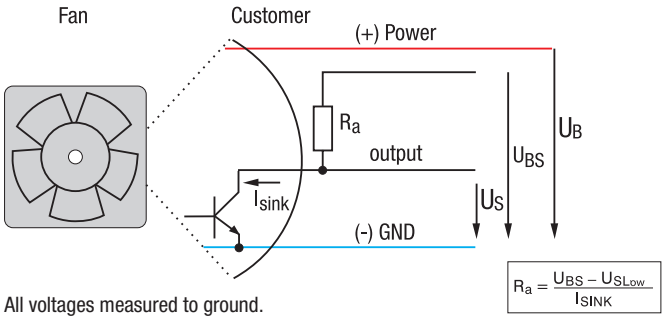

All voltages measured to ground.
External load resistor R_a / U_S / U_{BS} required.

Signal data	Speed signal $U_{S\,Low}$	Condition: I_{sink}	Speed signal $U_{S\,High}$	Condition: I_{source}	Admissible sink current $I_{sink\,max.}$	Pulses per revolution*
Type	**VDC**	**mA**	**VDC**	**VDC**	**mA**	
12 / 24 V	≤ 0.4	2	≤ 30	30	4	2
48 V	≤ 0.4	2	≤ 60	60	4	2

Subject to change

Standard value, can vary depending on fan series.
* Depending on the fan electronics other values are feasible e. g. 3 or 6.

Speed signal /12

- Speed-proportional, square-wave signal for external monitoring of the fan motor speed
- 2, 3, or 6 pulses per revolution
- TTL-compatible
- Integrated pull-up resistor
- Connection via separate cable
- The sensor signal also serves as a major comparison variable for setting and maintaining the setpoint speed for interactive or controlled cooling with one or more interconnected fans.

Available on request:
- Electrically isolated speed signal circuit
- Varying voltage potentials for power and logic circuit

Electrical hookup

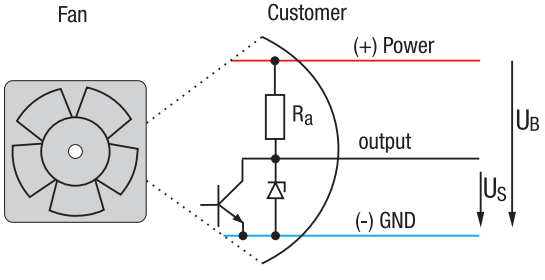

All voltages measured to ground.

Signal data	Speed signal $U_{S\,Low}$	Condition: I_{sink}	Speed signal $U_{S\,High}$	Condition: I_{source}	Admissible sink current $I_{sink\,max.}$	Pulses per revolution*
Type	**VDC**	**mA**	**VDC**	**mA**	**mA**	
12 / 24 / 48 V	≤ 0.4	1	2.5–5.5	1	1	2

Subject to change

Standard value, can vary depending on fan series.
* Depending on the fan electronics other values are feasible e. g. 3 or 6.

ebmpapst

Signal output voltage

Standard signal for all models (exceptions see below)

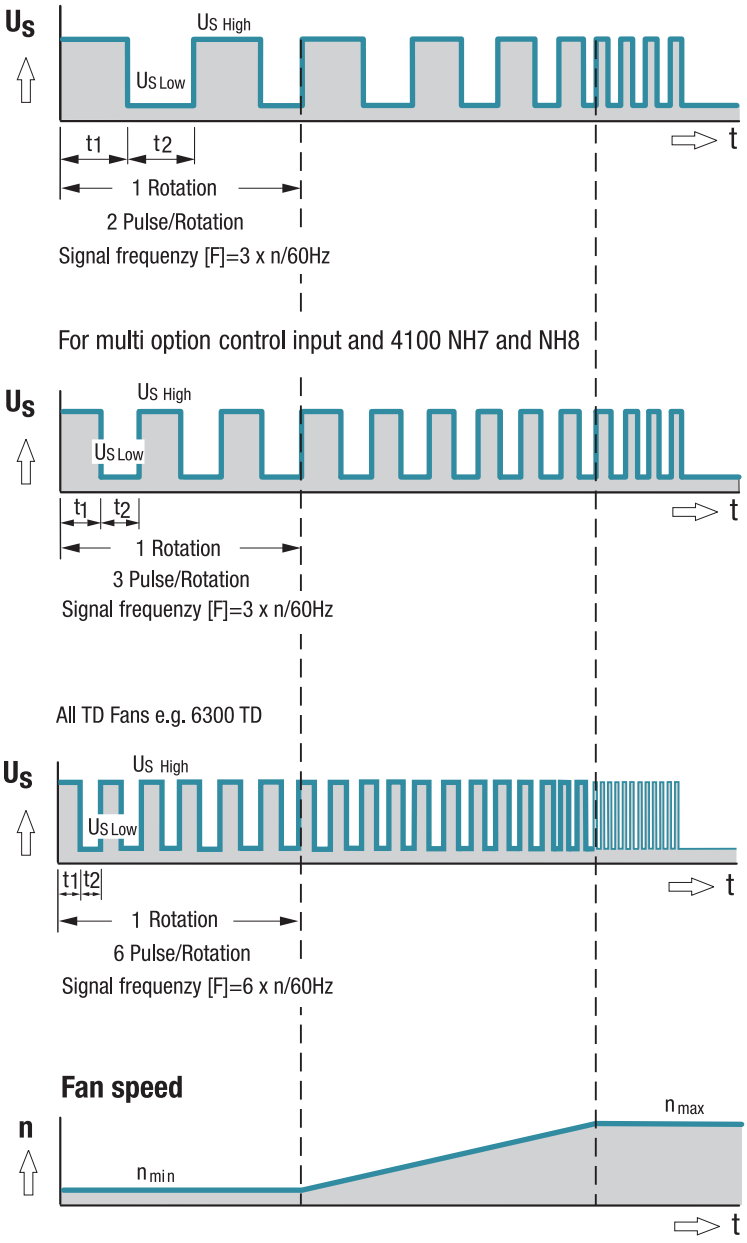

Note:
Fans that come with these fan specials could have variations with respect to the temperature range, voltage range, and power consumption compared to standard fans without specials.