Plugs, mobile sockets, panel mounting sockets, surface mounting sockets, P17 Tempra Pro IP44 and low voltage 66/67

Catalogue number(s): 5 551 01/02/04/05/06/07/08/09/10/12/13/21/22/24/25/ 26/27/28/29/30/32/33/51/52/54/55/56/57/58/59/60/62/63/81/84/85/86/88/89/90/92/93 - 5 552 11/14/15/16/17/18/19/20/22/23/31/34/35/36/37/38/39/40/42/43/51/54/55/56/57/58/59/60/62/63/81/84/85/86/88/89/90/92/93 - 5 553 01/04/05/06/08/09/12/21/24/25/26/28/29/32/51/54/55/56/58/59/62/81/84/85/86/88/89/92 - 5 554 14/15/16/18/19/21/22/31/34/35/36/38/39/41/42/43/51/54/55/56/58/59/62/63/81/84/85/86/88/89/91/92

IP44

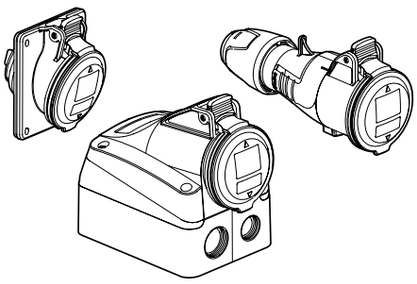

IP66/67

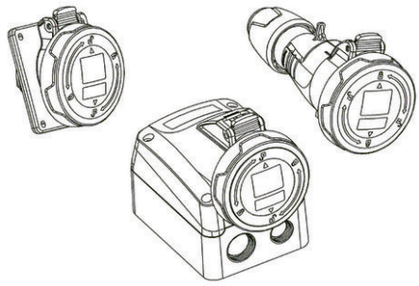

CONTENTS Page

1. General characteristics 1
2. Use 1
3. Range/Equivalence table 1
4. Dimensions 3
5. Technical characteristics 6
6. Installation 7
7. Connection 9
8. Standards & regulations 10
9. Accessories 10

1. GENERAL CHARACTERISTICS

- 16 to 32A IP44 AND IP66/67
- Material: PA6 RAL 7042
- IK 09

The surface mounting sockets and mobile sockets are used for current distribution
The plugs are to be equipped with portable or mobile electrical equipment (i.e.: lamp, air compressor, welding units, etc...)
Connected to a mobile socket, they together form an extension.

2. USE

A. Panel mounting sockets and surface mounting sockets
- For fixing using captive screws
- 5.5 screw PZ2 with mixed head (flat or Pozidriv screwdriver 5.5)
- Incline:
  - 15° for panel mounting sockets
  - 5 or 25° for surface mounting sockets
- Removable contact support for surface mounting sockets.
- On surface mounting sockets, 4 sealed and threaded entries for cable gland ISO mounting.

B. Mobile plugs and sockets
- For fixing using captive screws
- 5.5 screw PZ2 with mixed head (flat or Pozidriv screwdriver 5.5)
- Quarter-turn closing of the product without fixing screw and locking (supplied unlocked) by locking slat
- Integrated cable gland with locknut claws
- Automatic sealing with cable insertion
- Cable splicing with simple tightening of the cable gland
- Captive cable gland
- Number of openings/closures tested: 30

2. USE (CONTINUED)

Easy and quick cabling

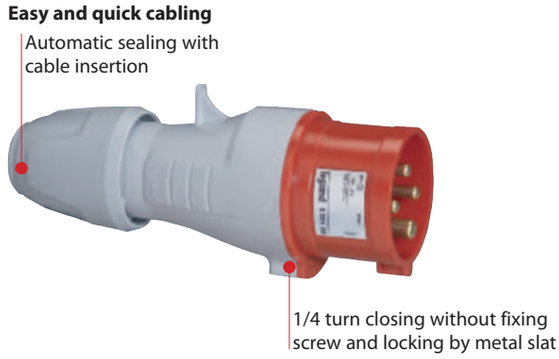

3. RANGE/EQUIVALENCE TABLE

16A straight plug

		IP44			IP66/67	
						
	Name	P17 Tempra Pro IP 44	P17 Tempra IP 44	P17 Sherpa IP 44	P17 Tempra Pro IP 66/67	P17 Tempra IP 66/67
100/130V	2P+E	5 551 21	0 574 21	0 574 31	5 553 21	0 563 00
	3P+E	5 551 22	0 574 22			
200/250V	2P+E	5 551 24	0 574 24	0 574 34	5 553 24	0 563 03
	3P+E	5 551 25	0 574 25		5 553 25	0 563 04
	4P+E	5 551 26	0 574 26		5 553 26	0 563 05
380/415V	2P+E	5 551 27	0 574 27			
	3P+E	5 551 28	0 574 28	0 574 38	5 553 28	0 563 07
	4P+E	5 551 29	0 574 29	0 574 39	5 553 29	0 563 08
440/460V	3P+E	5 551 30	6 573 07			
480/500V	3P+E	5 551 32	0 563 59		5 553 32	
	4P+E	5 551 33	0 563 60			

F01811EN-03.indd 1 06/12/2016 10:22

Plugs, mobile sockets, panel mounting sockets, surface mounting sockets, P17 Tempra Pro IP44 and low voltage 66/67

Catalogue number(s): 5 551 01/02/04/05/06/07/08/09/10/12/13/21/22/24/25/ 26/27/28/29/30/32/33/51/52/54/55/56/57/58/59/60/62/63/81/84/85/86/88/89/90/92/93 - 5 552 11/14/15/16/17/18/19/20/22/23/31/34/35/36/37/38/39/40/42/43/51/54/55/56/57/58/59/60/62/63/81/84/85/86/88/89/90/92/93 - 5 553 01/04/05/06/08/09/12/21/24/25/26/28/29/32/51/54/55/56/58/59/62/81/84/85/86/88/89/92 - 5 554 14/15/16/18/19/21/22/31/34/35/36/38/39/41/42/43/51/54/55/56/58/59/62/63/81/84/85/86/88/89/91/92

3. RANGE/EQUIVALENCE TABLE (CONTINUED)

16A mobile socket

		IP44			IP66/67	
	Name	P17 Tempra Pro IP44	P17 Tempra IP44	P17 Sherpa IP44	P17 Tempra Pro IP 66/67	P17 Tempra IP 66/67
100/130V	2P+E	5 551 01	0 575 01	0 575 11	5 553 01	0 562 00
	3P+E	5 551 02	0 575 02			
200/250V	2P+E	5 551 04	0 575 04	0 575 14	5 553 04	0 562 03
	3P+E	5 551 05	0 575 05		5 553 05	0 562 04
	4P+E	5 551 06	0 575 06		5 553 06	0 562 05
380/415V	2P+E	5 551 07	0 575 07			
	3P+E	5 551 08	0 575 08	0 575 18	5 553 08	0 562 07
	4P+E	5 551 09	0 575 09	0 575 19	5 553 09	0 562 08
440/460V	3P+E	5 551 10	6 574 07			
480/500V	3P+E	5 551 12	0 562 59		5 553 12	
	4P+E	5 551 13	0 562 60			

16A panel mounting socket

		IP44			IP66/67	
	Name	P17 Tempra Pro IP44	P17 Tempra IP44	P17 Sherpa IP44	P17 Tempra Pro IP 66/67	P17 Tempra IP 66/67
100/130V	2P+E	5 551 51	0 553 50	0 555 50	5 553 01	0 553 00
	3P+E	5 551 52	0 553 51			
200/250V	2P+E	5 551 54	0 553 53	0 555 53	5 553 54	0 553 03
	3P+E	5 551 55	0 553 54		5 553 55	0 553 04
	4P+E	5 551 56	0 553 55		5 553 56	0 553 05
380/415V	2P+E	5 551 57	0 553 56			
	3P+E	5 551 58	0 553 57	0 555 57	5 553 58	0 553 07
	4P+E	5 551 59	0 553 58	0 555 58	5 553 59	0 553 08
440/460V	3P+E	5 551 60	6 572 07			
480/500V	3P+E	5 551 62	0 553 59		5 553 62	
	4P+E	5 551 63	0 553 60			

16A panel mounting socket

		IP44			IP66/67	
	Name	P17 Tempra Pro IP44	P17 Tempra IP44	P17 Sherpa IP44	P17 Tempra Pro IP 66/67	P17 Tempra IP 66/67
100/130V	2P+E	5 551 81	0 576 10		5 553 81	0 576 50
200/250V	2P+E	5 551 84	0 576 11		5 553 84	0 576 51
	3P+E	5 551 85	0 576 15		5 553 85	0 576 55
	4P+E	5 551 86	0 576 21		5 553 86	0 576 61
380/415V	3P+E	5 551 88	0 576 17		5 553 88	0 576 57
	4P+E	5 551 89	0 576 23		5 553 89	0 576 63
440/460V	3P+E	5 551 90	6 571 07			
480/500V	3P+E	5 551 92	0 576 19		5 553 92	
	4P+E	5 551 93	0 576 25			

32A straight plug

		IP44			IP66/67	
	Name	P17 Tempra Pro IP44	P17 Tempra IP44	P17 Sherpa IP44	P17 Tempra Pro IP 66/67	P17 Tempra IP 66/67
100/130V	2P+E	5 552 31	0 581 21		5 554 31	0 563 20
200/250V	2P+E	5 552 34	0 581 24	0 581 34	5 554 34	0 563 23
	3P+E	5 552 35	0 581 25		5 554 35	0 563 24
	4P+E	5 552 36	0 581 26		5 554 36	0 563 25
380/415V	2P+E	5 552 37	0 581 27			
	3P+E	5 552 38	0 581 28	0 581 38	5 554 38	0 563 27
	4P+E	5 552 39	0 581 29	0 581 39	5 554 39	0 563 28
440/460V	3P+E	5 552 40	6 573 27			
440V	3P+E				5 554 41	6 571 26
480/500V	3P+E	5 552 42	0 563 79		5 554 42	
	4P+E	5 552 43	0 563 80		5 554 43	

32A mobile socket

		IP44			IP66/67	
	Name	P17 Tempra Pro IP44	P17 Tempra IP44	P17 Sherpa IP44	P17 Tempra Pro IP 66/67	P17 Tempra IP 66/67
100/130V	2P+E	5 552 11	0 582 01			
200/250V	2P+E	5 552 14	0 582 04	0 582 14	5 554 14	0 562 23
	3P+E	5 552 15	0 582 05		5 554 15	0 562 24
	4P+E	5 552 16	0 582 06		5 554 16	0 562 25
380/415V	2P+E	5 552 17	0 582 07			
	3P+E	5 552 18	0 582 08	0 582 18	5 554 18	0 562 27
	4P+E	5 552 19	0 582 09	0 582 19	5 554 19	0 562 28
440/460V	3P+E	5 552 20	6 574 27			
440V	3P+E				5 554 21	6 571 46
480/500V	3P+E	5 552 22	0 562 79		5 554 22	
	4P+E	5 552 23	0 562 80			

32A panel mounting socket

		IP44			IP66/67	
	Name	P17 Tempra Pro IP44	P17 Tempra IP44	P17 Sherpa IP44	P17 Tempra Pro IP 66/67	P17 Tempra IP 66/67
100/130V	2P+E	5 552 51	0 553 70		5 554 51	0 553 20
200/250V	2P+E	5 552 54	0 553 73	0 555 73	5 554 54	0 553 23
	3P+E	5 552 55	0 553 74		5 554 55	0 553 24
	4P+E	5 552 56	0 553 75		5 554 56	0 553 25
380/415V	2P+E	5 552 57	0 553 76			
	3P+E	5 552 58	0 553 77	0 555 77	5 554 58	0 553 27
	4P+E	5 552 59	0 553 78	0 555 78	5 554 59	0 553 28
440/460V	3P+E	5 552 60	6 572 27			
480/500V	3P+E	5 552 62	0 553 79		5 554 62	
	4P+E	5 552 63	0 553 80		5 554 63	

Plugs, mobile sockets, panel mounting sockets, surface mounting sockets, P17 Tempra Pro IP44 and low voltage 66/67

Catalogue number(s): 5 551 01/02/04/05/06/07/08/09/10/12/13/21/22/24/25/ 26/27/28/29/30/32/33/51/52/54/55/56/57/58/59/60/62/63/81/84/85/86/88/89/90/92/93 - 5 552 11/14/15/16/17/18/19/20/22/23/31/34/35/36/37/38/39/40/42/43/51/54/55/56/57/58/59/60/62/63/81/84/85/86/88/89/90/92/93 - 5 553 01/04/05/06/08/09/12/21/24/25/26/28/29/32/51/54/55/56/58/59/62/81/84/85/86/88/89/92 - 5 554 14/15/16/18/19/21/22/31/34/35/36/38/39/41/42/43/51/54/55/56/58/59/62/63/81/84/85/86/88/89/91/92

3. RANGE/EQUIVALENCE TABLE (CONTINUED)

32A panel mounting socket

		IP44			IP66/67	
						
	Name	P17 Tempra Pro IP44	P17 Tempra IP44	P17 Sherpa IP44	P17 Tempra Pro IP 66/67	P17 Tempra IP 66/67
100/130V	2P+E	5 552 81	0 576 08		5 554 81	0 576 48
200/250V	2P+E	5 552 84	0 576 12		5 554 84	0 576 52
	3P+E	5 552 85	0 576 16		5 554 85	0 576 56
	4P+E	5 552 86	0 576 22		5 554 86	0 576 62
380/415V	3P+E	5 552 88	0 576 18		5 554 88	0 576 58
	4P+E	5 552 89	0 576 24		5 554 89	0 576 64
440/460V	3P+E	5 552 90	6 571 27			
440V	3P+E				5 554 91	6 571 16
480/500V	3P+E	5 552 92	0 576 20		5 554 92	
	4P+E	5 552 93	0 576 26			

4. DIMENSIONS

Straight plugs 16/32A IP44

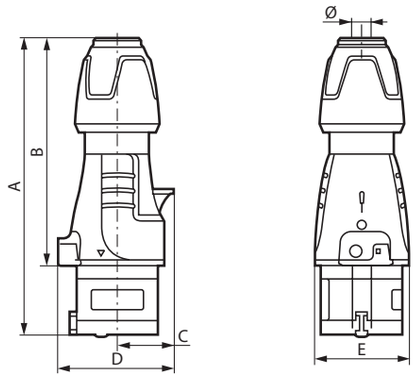

	A	B	C	D	E	Ø
LV 16 A						
2P+E	146 to 157	109.5 to 120.5	30	61	50	6.5 to 14
3P+E	146 to 157	109.5 to 120.5	34	67	55	7.10 to 15.5
3P+N+E	163 to 176	126.5 to 139.5	38	76	65	8 to 20
LV 32 A						
2P+E	172 to 185	127 to 140	40	78	65	8 to 20
3P+E	172 to 185	127 to 140	40	78	65	8 to 20
3P+N+E	179 to 189	133 to 143	45	86	71	11.9 to 22.2

4. DIMENSIONS (CONTINUED)

Straight plugs 16/32A IP44

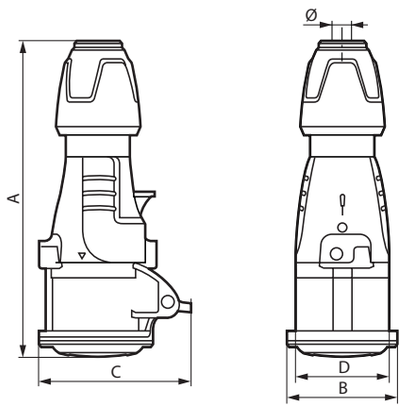

	A	B	C	D	Ø
LV 16 A					
2P+E	156 to 167	59	81	50	6.5 to 14
3P+E	157 to 168	65	88	55	7.10 to 15.5
3P+N+E	175 to 188	72	94	65	8 to 20
LV 32 A					
2P+E	184 to 197	73	99	65	8 to 20
3P+E	184 to 197	73.5	99	65	8 to 20
3P+N+E	190 to 203	79.5	105	71	11.9 to 22.2

Straight plugs 16/32A IP66/67

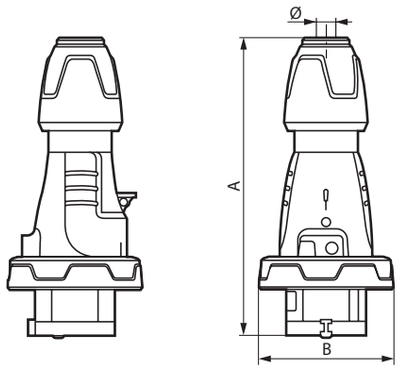

	A	B	Ø
LV 16 A			
2P+E	146 to 157	72.5	6.5 to 14
3P+E	146 to 157	80.5	7.10 to 15.5
3P+N+E	163 to 176	89	8 to 20
LV 32 A			
2P+E	172 to 185	93	8 to 20
3P+E	172 to 185	93	8 to 20
3P+N+E	179 to 189	100	11.9 to 22.2

Plugs, mobile sockets, panel mounting sockets, surface mounting sockets, P17 Tempra Pro IP44 and low voltage 66/67

Catalogue number(s): 5 551 01/02/04/05/06/07/08/09/10/12/13/21/22/24/25/ 26/27/28/29/30/32/33/51/52/54/55/56/57/58/59/60/62/63/81/84/85/86/88/89/90/92/93 - 5 552 11/14/15/16/17/18/19/20/22/23/31/34/35/36/37/38/39/40/42/43/51/54/55/56/57/58/59/60/62/63/81/84/85/86/88/89/90/92/93 - 5 553 01/04/05/06/08/09/12/21/24/25/26/28/29/32/51/54/55/56/58/59/62/81/84/85/86/88/89/92 - 5 554 14/15/16/18/19/21/22/31/34/35/36/38/39/41/42/43/51/54/55/56/58/59/62/63/81/84/85/86/88/89/91/92

4. DIMENSIONS (SUITE)

Mobile sockets 16/32A IP66/67

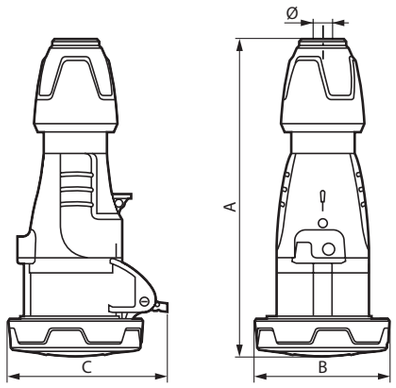

	A	B	C	Ø
LV 16 A				
2P+E	159 to 170	72.5	86	6.5 to 14
3P+E	159 to 170	80.5	93	7.10 to 15.5
3P+N+E	179 to 190	89	100	8 to 20
LV 32 A				
2P+E	187 to 200	93	104	8 to 20
3P+E	187 to 200	93	104	8 to 20
3P+N+E	192 to 205	100	110.5	11.9 to 22.2

IP 44 panel mounting sockets with standard fixing centres

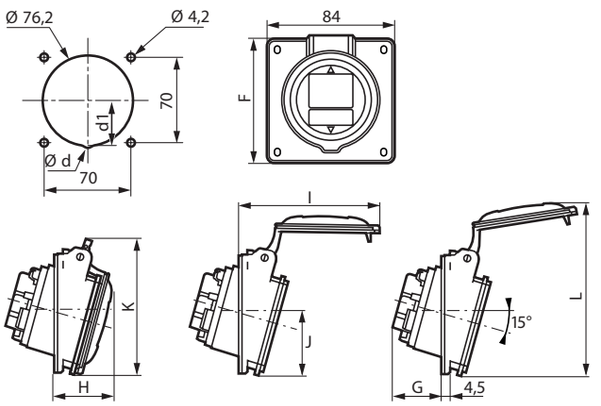

	Ød	d1	F	G	H	I	J	K	L
LV 16 A									
2P+E	-	-	84	33.5	37.5	85	42	88.5	112.5
3P+E	-	-	84	35.5	38.5	93	42	91.5	118.5
3P+N+E	-	-	84	36.5	39.5	100	43.3	97	123.5
LV 32 A									
2P+E	-	-	94	41.5	45.5	110	47	102	131
3P+E									
3P+N+E	8	36	94	42.5	46.5	117	47	107.5	138

16/32A IP44 surface mounting sockets

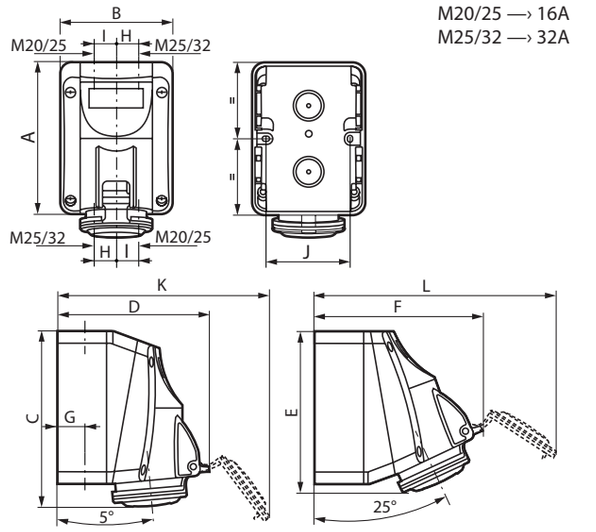

	A	B	C	D	E	F	G	H	I	J	K	L
LV 16 A												
2P+E	125	93	147	126	138	139	22	17	20	70	176	195
3P+E	125	93	147	134	138	147	22	17	20	70	190	210
3P+N+E	125	93	147	140	138	153	22	17	20	70	201	221
LV 32 A												
2P+E	150	113	174	156	163	172	28	22	26	90	220	245
3P+E	150	113	174	156	163	172	28	22	26	90	220	245
3P+N+E	150	113	174	162	163	177	28	22	26	90	230	256

Plugs, mobile sockets, panel mounting sockets, surface mounting sockets, P17 Tempra Pro IP44 and low voltage 66/67

Catalogue number(s): 5 551 01/02/04/05/06/07/08/09/10/12/13/21/22/24/25/ 26/27/28/29/30/32/33/51/52/54/55/56/57/58/59/60/62/63/81/84/85/86/88/89/90/92/93 - 5 552 11/14/15/16/17/18/19/20/22/23/31/34/35/36/37/38/39/40/42/43/51/54/55/56/57/58/59/60/62/63/81/84/85/86/88/89/90/92/93 - 5 553 01/04/05/06/08/09/12/21/24/25/26/28/29/32/51/54/55/56/58/59/62/81/84/85/86/88/89/92 - 5 554 14/15/16/18/19/21/22/31/34/35/36/38/39/41/42/43/51/54/55/56/58/59/62/63/81/84/85/86/88/89/91/92

4. DIMENSIONS (SUITE)

IP66/67 surface mounting sockets

M20/25 ⟶ 16A
M25/32 ⟶ 32A

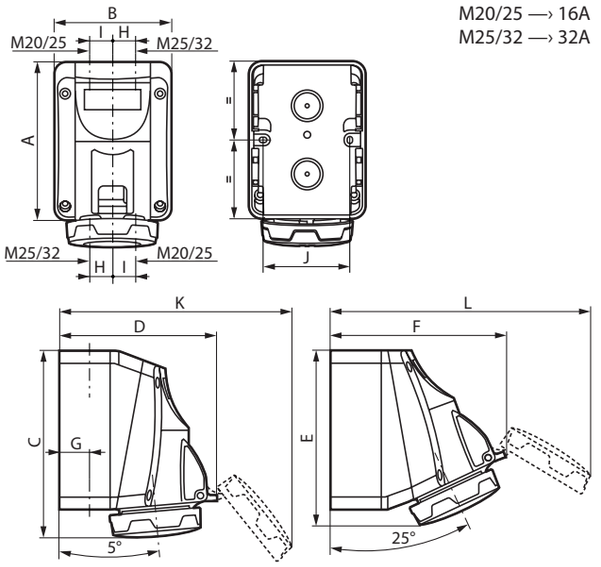

	A	B	C	D	E	F	G	H	I	J	K	L
LV 16 A												
2P+E	125	93	144	125	131	137	22	17	20	70	178	200
3P+E	125	93	144	133	131	145	22	17	20	70	194	215
3P+N+E	125	93	144	139	131	150	22	17	20	70	205	227
LV 32 A												
2P+E	150	113	171	155	156	170	28	22	26	90	224	250
3P+E												
3P+N+E	150	113	171	161	156	175	28	22	26	90	231	260

IP66/67 panel mounting sockets

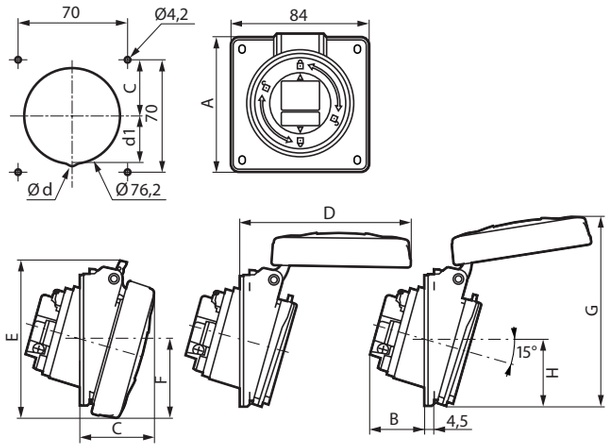

	Ød	d1	A	B	C	D	E	F	G	H
LV 16A										
2P+E	-	-	84	33.5	42	94	88	42.5	114	42
3P+E	-	-	84	35.5	43	101	94.5	46	118	42
3P+N+E	-	-	84	36.5	44	108.5	101	50	123	42.5
LV 32 A										
2P+E	-	-	94	41.5	50.5	118	105.5	54.5	129.5	47.5
3P+E										
3P+N+E	8	36	94	42.5	51.5	124.5	112	57.5	137	51

5. TECHNICAL CHARACTERISTICS

5.1 Incandescent wire resistance
- 850°C for live part supports
- 650°C for other components

5.2 Isolation voltage
750V
Dielectric strength
3000V 50Hz

5.3 Minimum Usage temperature (connection and disconnection)
- 40°C / maximum + 55°C

5.4 Minimum Installation temperature (wiring and/or fitting)
- 5°C / maximum + 40°C

5.5 Degree of protection
No penetration by water or dust in the IP66/67 products after ageing for 7 days at 80°C.

5.6 Materials

Chemical agents	Material resistance
Aqueous solutions	
Cold water	++
Hot water	-
Steam	--
5 % saline solution	+
Hydrogen peroxide	-
Water + washing powder	+
Water + surfactants	+
Formaldehyde	++
Alcohols	
Ethanol	++
Methanol	-
Propanol	+
Butanol	+
Glycols	
Ethylene glycol	-
Phenols	--
Cresols	-
Alkalis	
Ammonia	+
Sodium hydroxide (caustic soda)	--
Sodium hypochlorite (12° bleach)	-
Potassium hydroxide (potash)	+
Strong oxidizing acids	
Concentrated acetic acid	--
5% nitric acid	-
10 % sulphuric acid	-
30% hydrochloric acid	-
70% perchloric acid	-
70% hydrofluoric acid	--
50% chromic acid	--
30% phosphoric acid	-
Weak acids	
Acetic acid diluted < 25%	-
Citric acid	+
Lactic acid	-
Formic acid	--
Uric acid	++

5.6 Material Characteristics (continued)

Chemical agents	Material resistance
Animal oils and fats	
Lard	++
Butter, cream	++
Vegetable oils and fats	
Linseed oil	++
Groundnut/Olive oil	++
Castor oil	++
Glycerine	++
Mineral oils and fats	
Paraffin wax (Vaseline)	++
Automotive engine oils	+
Silicone oils	+
Cutting oils	++
Hydraulic oils	++
Hydrocarbons	
Lead-free petrol	++
Diesel	++
Kerosene	++
White spirit	+
Chlorinated solvents	
Trichloroethylene	-
Trichloroethane	--
Perchlorethylene	-
Methylene chloride	--
Carbon tetrachloride	-
Chloroform	-
Aromatic solvents	
Benzene	+
Toluene	+
Xylene	+
Aliphatic solvents	
Hexane	+
Fluorinated solvents	
Trichlorofluoro methane	--
Ketones	
Acetone	+
Methyl ethyl ketone	+
Ethyl acetate	+
Terpenes	
Turpentine	-

Resistance to chemical agents at ambient temperature related to a risk of exposure by spraying

++ excellent resistance (continuous exposure)
+ good resistance (lasting exposure)
- limited resistance (brief exposure possible)
-- poor resistance (exposure to be avoided)

6. INSTALLATION

6.1 Plugs and sockets

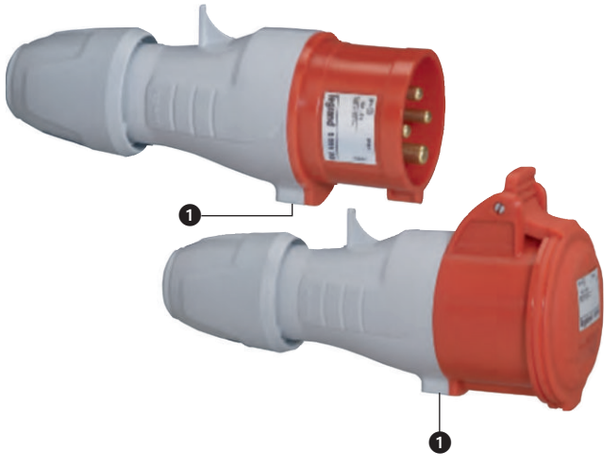

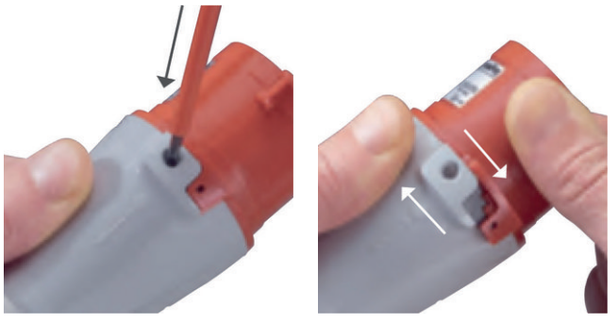

1 - QUICK OPENING/CLOSING SYSTEM

Unlocked by pressing with a screwdriver. Marking indicates the location for the locking clip.

Opened by turning the 2 parts in opposite directions

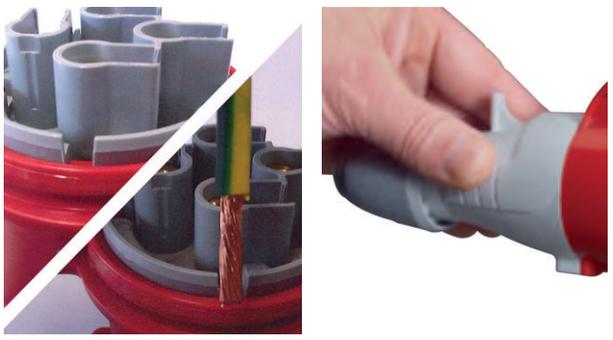

2 - CABLE STRIPPING

Marking allows the user to quickly see the length of cable to be stripped.
Option of using cables with glands.

3 - EASY HANDLING

Gripping areas on the body of the mobile products and the cable grip.

6.2 Surface mounting sockets



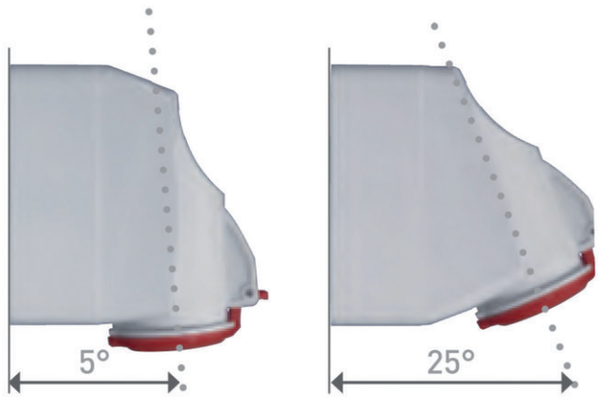

1 - 2 MOUNTING POSITIONS

To solve the problem of limited space, the surface mounting sockets offer 2 different mounting positions (5° or 25°) which allow users to adapt to the space available without changing the box.

6. INSTALLATION (CONTINUED)

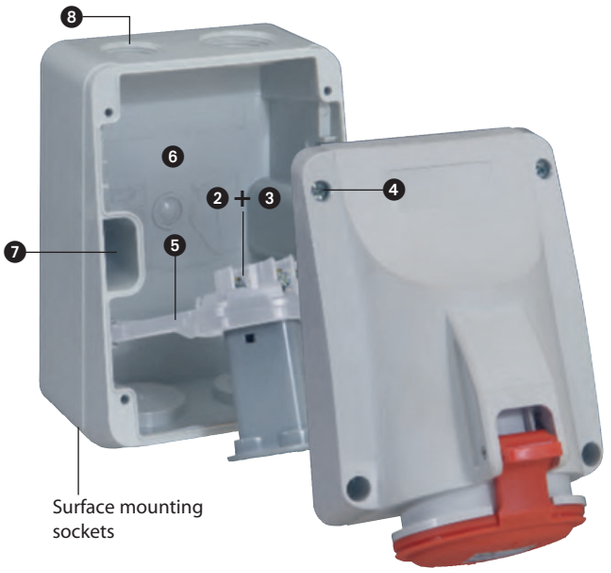

Surface mounting sockets



2 - CABLE STRIPPING

Marking allows the user to quickly see the length of the cable to be stripped.
Option of using cables with glands.



3 - JUST ONE SCREW PER TERMINAL

A single captive mixed head PZ 2 screw, via connection terminal. Same type of screw for both ratings, 16 and 32A.



4 - QUICK COVER FIXING

Stainless steel captive screws with mixed head for PZ2 or flat screwdriver, tightening torque between 1.6 Nm and 1.8 Nm for a good seal and corrosion resistance.

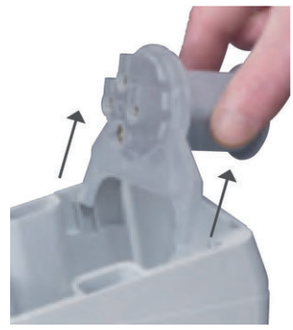

5 - EASY REMOVAL

The active parts of the product can be removed from the base for easier wiring and changing the socket angle

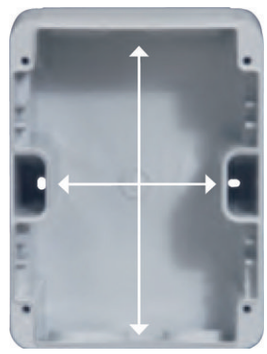

6 - EASY WIRING

Optimum wiring area for easier connections.

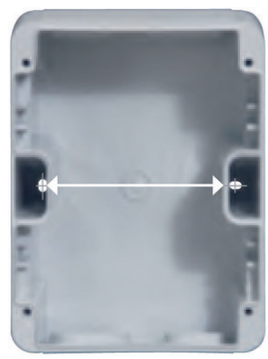

7 - EASY MAINTENANCE

Fixing centres that are identical to the old range (70 mm) for the 16A rating and marking in the base of the box for the 32A rating.

6. INSTALLATION (CONTINUED)

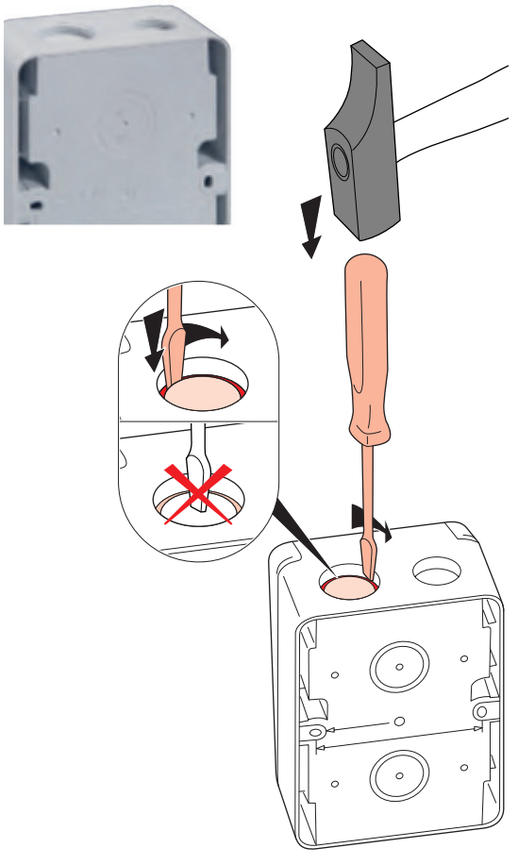

8 - CABLE ENTRY POINTS

4 threaded and sealed cable entries at the top and the bottom and marking at the back of the box for ISO cable glands or trunking.



9 - OPENING LEVER

For easier connections/disconnections. Cover held open on panel sockets and surface mounting sockets.

6. INSTALLATION (CONTINUED)



10 - POSITION MARKS

Information engraved on the ring cover of IP66/67 products means the user can quickly check whether it is in the open or closed position. Marking area on the socket flap cover or on the plug skirt for easy identification by the user.

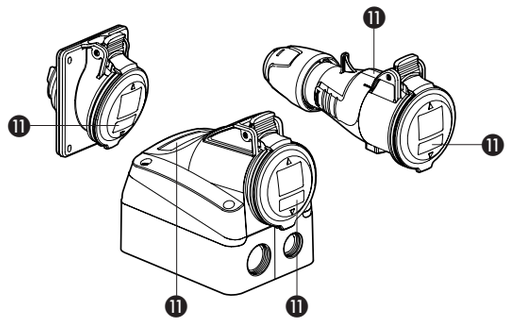

11 - Marking/identification area

7. CONNECTION

7.1 Connection capacity

Connection cross-section for pilot wire

Type	Intensity	Size of conductors (mm ≤)	Size of conductors
Surface mounting socket and panel mounting socket	16A	1.5 to 4	Rigid
	16A	1 to 2.5	Rigid
Mobile plugs and sockets	32A	2.5 to 6	Flexible
	32A	2.5 to 10	Flexible

7.2 Tightening torque of connection terminal screws

- 16A LV: 0.8 to 1.2 Nm
- 32A LV: 1.2 to 1.5 Nm

8. STANDARDS & REGULATIONS

- IEC 60309-1 and EN 60309-1 (design rules)
- IEC 60309-2 and EN 60309-2 (interchangeability requirements)
- IEC 60529 and NF EN 60529 (IP)
- IEC 62262 and NF EN 62262 (IK)
- Decree of 14/11/88 (safety of workers)
- Directive 2002/95/CE (ROHS)

9. ACCESSORIES

IP 55 adaptor base for Mosaic 2-module mechanisms (except special surface mounting type).

Cat. No.: 0 539 48

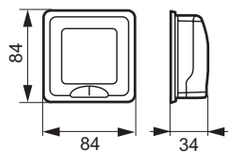

IEC pin / domestic pin (NFC) adaptor

Example of an adaptor



Allows a 16A 2P+E 250V NFC plug to be connected to a 16A 2P+E 200/250V socket outlet with IEC pin configuration

0 521 00: NFC pin
0 521 01: British standard pin
0 521 02: German standard pin
0 521 03: NFC pin (with flap cover)
0 521 05: empty for MOSAIC 2-module mechanisms

Flush-mounting boxes for masonry IP55

Allows the socket outlet(s) to be installed to standard fixing centres (70 x 70), or to domestic sockets 0 576 71/72.

0 577 21 for 2 16A sockets



0 577 22 for 1 16 or 32A socket



32A socket to be installed horizontally (see user manual)