Differential pressure gauge Eco
Model A2G-05

Applications

- Differential pressure monitoring for filters
- Pressure monitoring for ventilators
- Overpressure monitoring for clean rooms and also under- and overpressure monitoring for laboratories and operating rooms

Special features

- Very small insertion depth
- Simple and fast mounting via threaded bezel
- Separated construction of measuring chamber and display area
- Integrated sealing element for direct mounting in a ventilation duct
- Individual design of dial and scale possible



Differential pressure gauge Eco, without built-in module, model A2G-05

Description

The model A2G-05 Eco differential pressure gauge is used for monitoring the differential pressure in ventilation and air-conditioning applications. The measuring ranges cover from 0 … 100 Pa to 0 … 6,000 Pa. Plus/minus ranges can be fulfilled from -50 … +50 Pa to -1,500 … +1,500 Pa.

The separated construction of the measuring chamber and display area ensures that impurities from the process air do not settle on the back of the window.

The differential pressure gauge is available in IP54 and IP65 ingress protection as well as two different mounting versions.

Mounting without threaded bezel
Due to its small insertion depth, the model A2G-05 Eco differential pressure gauge in this version is ideally suited for recessed installation in doors, case panels and walls.

Mounting with threaded bezel
Depending on the alignment of the threaded bezel the device can be mounted with the same components on wall thicknesses of 2 … 10 mm or 29 … 50 mm. This mounting version is notable for its fast and tool-free installation.

Data sheets showing similar products:
Differential pressure gauge, model A2G-10; see data sheet PM 07.40

Part of your business

Specifications

Differential pressure gauge Eco, model A2G-05	
Version	■ Standard version ■ Silicone-free version
Nominal size in mm	110
Measuring range	■ 0 … 100 Pa to 0 … 6,000 Pa ■ -50 … +50 Pa to -1,500 … +1,500 Pa Other plus/minus ranges on request
Unit	■ Pa ■ kPa ■ inWC ■ mmWC ■ mbar
Scale	■ Single scale ■ Dual scale
Accuracy class	
Span ≥ 250 Pa	3.0
Span 101 … 249 Pa	5.0
Span ≤ 100 Pa	10.0
Process connection	Fixed connection in angular form for hoses with inner diameter 4 … 6 mm
Movement	Contact-free transmission (SWISS MOVEMENT)
Materials	
Case components	Plastic, glass-fibre reinforced
Separating diaphragm	■ Silicone ■ EPDM (with silicone-free version)
Window	Polycarbonate (UV stabilised)
Dial	Aluminium
Pointer	Plastic, black
Mark pointer	■ Without ■ Plastic, red
Medium	■ Air ■ Non-flammable and non-aggressive gases
Permissible temperatures	
Medium	-20 … +50 °C [-4 … +122 °F]
Ambient	-30 … +80 °C [-22 … +176 °F]
Max. working pressure (static pressure)	20 kPa
Ingress protection per IEC/EN 60529	■ IP54 ■ IP65
Weight (pressure measuring system)	240 g

Approvals (option)

Logo	Description	Country
	GOST Metrology, measurement technology	Russia
	UkrSEPRO Metrology, measurement technology	Ukraine

Certificates (option)

- Measurement report per EN 837
- 2.2 test report per EN 10204
- 3.1 inspection certificate per EN 10204

Approvals and certificates, see website

Mounting versions

With mounting ring [1)]

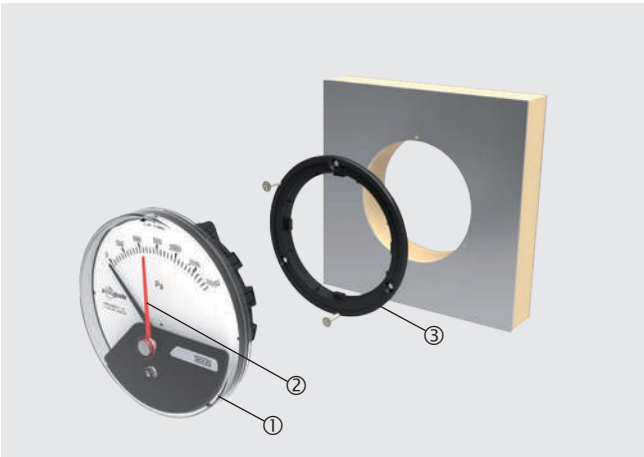

With threaded bezel [2)]

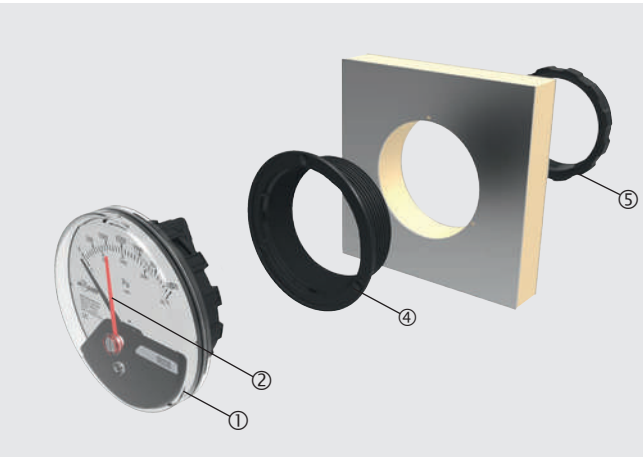

1) Insertion depth 42 mm
2) For wall thicknesses 2 … 10 mm and 29 … 50 mm

Legend:

① Pressure measuring system
② Red mark pointer
③ Mounting ring
④ Built-in case
⑤ Threaded bezel

Dimensions in mm

With mounting ring, back mount

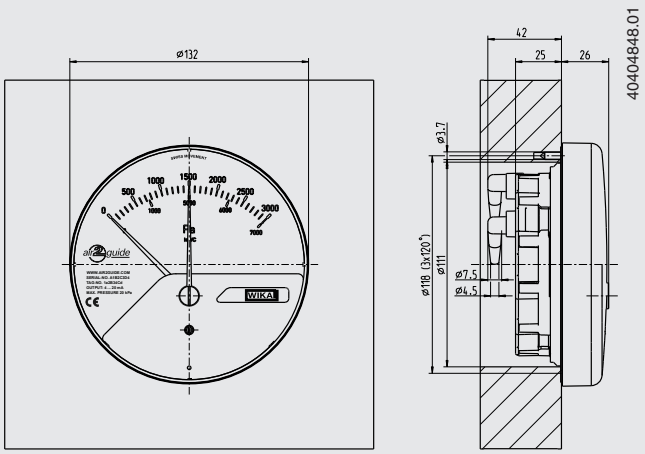

With threaded bezel, back mount

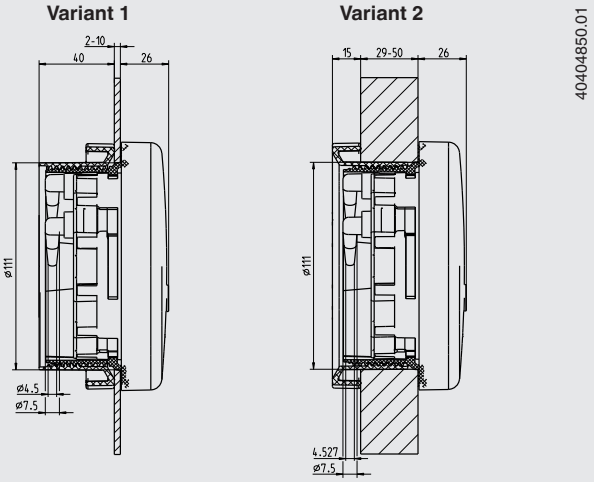

Legend

Variant 1: Threaded bezel orientation for wall thicknesses 2 … 10 mm

Variant 2: Threaded bezel orientation for wall thicknesses 29 … 50 mm

Accessories

Description		Order number
	**Static duct probes with combi hose connection for pressure measuring hoses Ø 4 … 7 mm**	
	Insertion length 100 mm	40232981
	Insertion length 150 mm	40232999
	Insertion length 200 mm	40233006
	**Measuring hoses**	
	PVC hose, inner diameter 4 mm, roll at 25 m	40217841
	PVC hose, inner diameter 6 mm, roll at 25 m	40217850
	Silicone hose, inner diameter 4 mm, roll at 25 m	40208940
	Silicone hose, inner diameter 6 mm, roll at 25 m	40208958
	**Duct connectors for measuring hoses Ø 4 … 6 mm**	40217507
	**Weather protection**	40241564

Ordering information

Model / Version / Measuring range / Unit / Scale / Ingress protection / Mark pointer / Mounting version / Accessories / Approvals / Certificates / Options

© 04/2012 WIKA Alexander Wiegand SE & Co. KG, all rights reserved.
The specifications given in this document represent the state of engineering at the time of publishing.
We reserve the right to make modifications to the specifications and materials.

WIKA Alexander Wiegand SE & Co. KG
Alexander-Wiegand-Straße 30
63911 Klingenberg/Germany
Tel. +49 9372 132-0
Fax +49 9372 132-406
info@wika.de
www.wika.de