LI5131

Sensor for point level detection

LI0132--K-00KQPKG/US

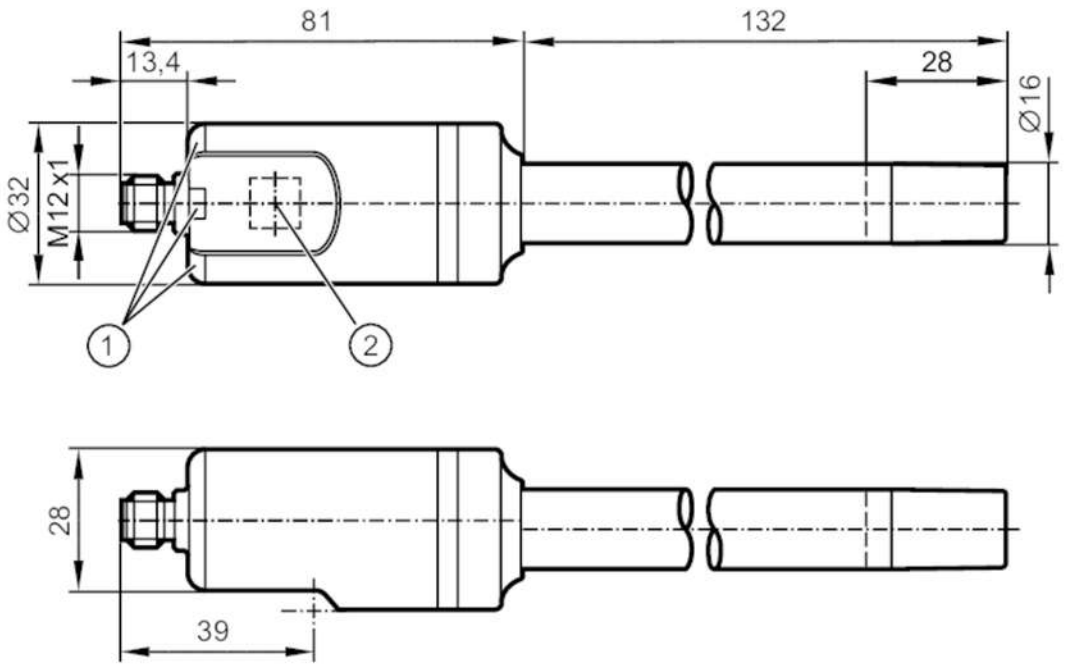

1 LEDs
2 inductive programming button

Product characteristics			
Number of inputs and outputs		Number of digital outputs: 2	
Factory setting		hydrous media	
Probe length L	[mm]	132	
Application			
Special feature		Gold-plated contacts	
Media		Liquids	
Dielectric constant of the medium		> 1,8	
Recommended media		water; hydrous media; oils; oil-based media	
Cannot be used for		See operating instructions, chapter "Intended use".	
Medium temperature	[°C]	-25...85	
Pressure rating		0.5 bar	0.05 MPa
Vacuum resistance	[mbar]	-500	
Electrical data			
Operating voltage	[V]	9.6...35 DC; (IO-Link: 18...30 DC)	
Current consumption	[mA]	< 15	
Protection class		III	
Reverse polarity protection		yes	
Power-on delay time	[s]	< 1	
Measuring principle		capacitive	
Inputs / outputs			
Number of inputs and outputs		Number of digital outputs: 2	

LI5131

Sensor for point level detection

LI0132--K-00KQPKG/US

Outputs		
Total number of outputs		2
Output signal		switching signal; IO-Link
Electrical design		PNP/NPN
Number of digital outputs		2
Output function		normally open / normally closed; (parameterisable)
Max. voltage drop switching output DC	[V]	2.5
Permanent current rating of switching output DC	[mA]	100
Short-circuit protection		yes
Type of short-circuit protection		pulsed
Overload protection		yes
Measuring/setting range		
Factory setting		hydrous media
Probe length L	[mm]	132
Active range A	[mm]	28
Temperature measurement		
Measuring range	[°C]	-25...85
Accuracy / deviations		
Temperature measurement		
Accuracy	[K]	1,5
Resolution	[K]	0.1
Dynamic response T09	[s]	240
Response times		
Response time	[s]	< 0.3
Interfaces		
Communication interface		IO-Link
Unterstützte Masterportklasse		A
Transmission type		COM2 (38,4 kBaud)
IO-Link revision		1.1
SDCI standard		IEC 61131-9
Profiles		Smart Sensor ED2: Identification and Diagnosis (0x4000), Measurement Data Channel (0x800A)
SIO mode		yes
Process data analogue		5
Process data binary		2
Min. process cycle time	[ms]	4.5
Supported DeviceIDs		**Type of operation** / **DeviceID**
		default / 1053
Operating conditions		
Ambient temperature	[°C]	-25...85
Storage temperature	[°C]	-25...85

LI5131

Sensor for point level detection

LI0132--K-00KQPKG/US

Protection		IP 68; IP 69K; (7 days / 3 m water depth / 0.3 bar: IP 68)	
Tests / approvals			
EMC		DIN EN 61000-6-2	
		DIN EN 61000-6-3	in a closed metal tank
		DIN EN 61000-6-4	in plastic or open metal tanks
Shock resistance		DIN EN 60068-2-27	12 g (11 ms)
Vibration resistance		DIN EN 60068-2-6	5 g (10...2000 Hz)
MTTF	[years]	433	
UL approval		UL Approval no.	H013
		File number UL	E174191
Mechanical data			
Weight	[g]	203.55	
Materials		PP reinforced fibre	
Materials (wetted parts)		PP	
Probe diameter	[mm]	16	
Displays / operating elements			
Display		operation	LED, green
		switching status	LED, yellow
Operating elements		inductive programming button	
Remarks			
Pack quantity		1 pcs.	
Electrical connection			

Connector: 1 x M12; coding: A; Contacts: gold-plated



Connection

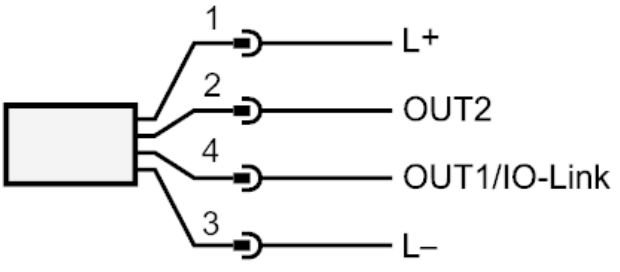

OUT1: switching output
OUT2: switching output