TECHNICAL DATASHEET

Stainless Steel Encoders AC 61 - Interbus

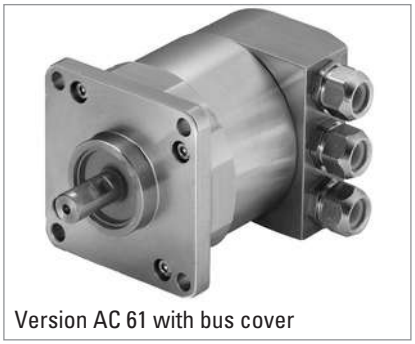

Version AC 61 with bus cover

- Compact design
- Protection class IP67
- High corrosion resistance
- Robust design
- Resolution up to 24 Bit (12 Bit ST, 12 Bit MT)
- Resolution programmable
- Preset (K3)
- Direction (K3)
- Bus cover
- Applications: packaging machine for food and beverage, ship equipment (e.g. cranes, winches, cable laying ships), offshore applications

GENERAL INFORMATION

The absolute stainless steel encoders are available in the Versions AC 59 and AC 61.

- AC 59: drawn stainless steel housing, only together with cable outlet, no access to control elements
- AC 61: machined housing, possible with cable or bus cover, access to control elements (DIP switch, Reset switch)

TECHNICAL DATA mechanical

Housing diameter	61.5 mm
Shaft diameter	9.52 mm / 10 mm (Solid shaft)
Flange (Mounting of housing)	Square flange 63.5 mm
Protection class shaft input (EN 60529)	IP67
Protection class housing (EN 60529)	IP67
Shaft load axial / radial	40 N / 60 N
Max. speed	max. 6000 rpm (continuous), max. 10000 rpm (short term)
Torque	≤ 1 Ncm
Moment of inertia	approx. 20 gcm²
Vibration resistance (DIN EN 60068-2-6)	100 m/s² (10 ... 500 Hz)
Shock resistance (DIN EN 60068-2-27)	1000 m/s² (6 ms)
Operating temperature	-40 °C ... +70 °C
Storage temperature	-40 °C ... +85 °C
Material shaft	Stainless Steel
Material housing	Stainless Steel
Weight	approx. 1180 g
Connection	Bus cover with 3 sealed cable exits

TECHNICAL DATA electrical

General design	as per DIN EN 61010-1, protection class III, contamination level 2, overvoltage class II
Supply voltage	DC 10-30 V

TECHNICAL DATASHEET

Stainless Steel Encoders AC 61 - Interbus

TECHNICAL DATA
electrical (continued)

Max. current w/o load	220 mA (ST, recommended external fuse: T 0.25 A), 250 mA (MT, recommended external fuse: T 0.25 A)
EMC	Noise emission according to EN 50081-2 Immunity to interference according to EN 50082-2
Resolution singleturn	10 - 12 Bit
Resolution multiturn	12 Bit
Output code	32 Bit binary
Linearity	± ½ LSB
Profile/ protocol	ENCOM-Profil K3 = ID-Code 37, K2 = ID-Code 36
Programmable	Resolution, Preset, Offset, Direction
Output current [1]	max. 4.5 A for bus cover with 2x M23 (recommended external fuse: T 4.5 A) max. 2 A for all other connections (recommended external fuse: T 2 A)
Baud rate	500 KBaud
Updating of values	every 600 µs

[1] Current with looped through voltage supply

DATA FORMAT Interbus K2/K3

	Differential signals (RS485) ENCOM profile K3, K2, 32 Bit, binary process data				
Data format	Sµpi-address	0	1	2	3
(as per Phoenix)	Byte-No.	3	2	1	0
ID-Code K2	36H (= 54 decimal)				
ID-Code K3	37H (= 55 decimal)				

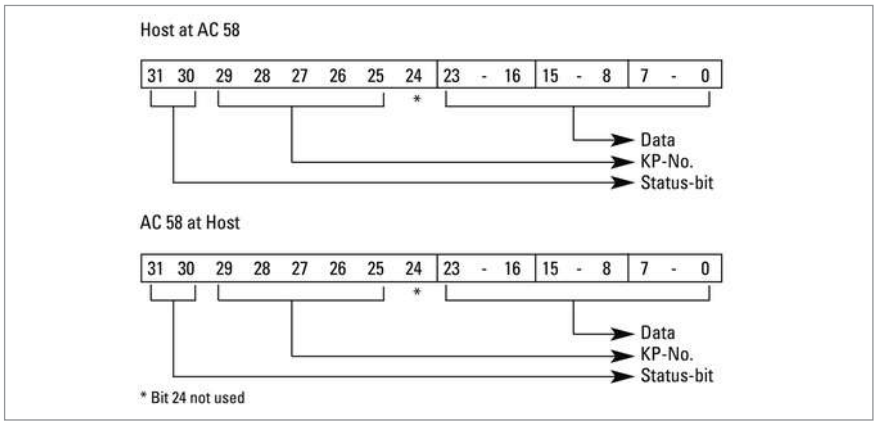

TECHNICAL DATASHEET

Stainless Steel Encoders AC 61 - Interbus

PROGRAMMABLE FUNKTIONS
for Interbus K3

Function (Programming directly via the bus through transfer of configuration parame-ters)	Preset values (manufacturer´s standard settings)	Customer-specific parameters
Code sequence for clockwise (cw) rotation	ascending	
Offset (KP-No. 05)	0	
Preset value (KP-No. 04)	0	
Scaling faktor (KP-No. 08)	1 [1]	

[1] maximum resolution

ELECTRICAL CONNECTIONS
Bus cover with 3 sealed cable exits

Connection clamp (12 pole)	
1	UB +
2	GND
3	DI1+
4	DI1-
5	D01+
6	D01-
7	D02+
8	D02-
9	DI2+
10	DI2-
11	RBST
12	GND

TECHNICAL DATASHEET

Stainless Steel Encoders AC 61 - Interbus

DIMENSIONED DRAWINGS

AC 61 Connection cable "Z"
Interface: Profibus, CANopen, CANlayer2, DeviceNet, Interbus

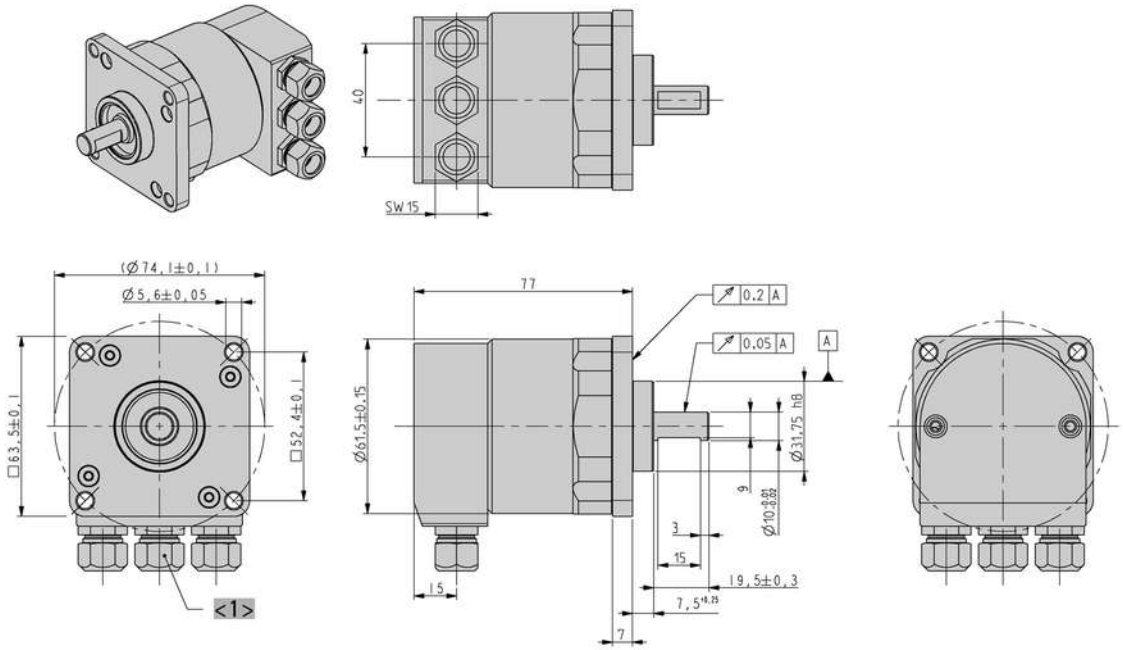

<1> Obsolete with DeviceNet

Dimensions in mm

ORDERING INFORMATION

Type	Resolution	Supply voltage	Flange, Protection, Shaft	Interface	Connection
☐	☐	☐	☐	☐	☐
AC61	**0010** 10 Bit ST **0012** 12 Bit ST **0013** 13 Bit ST **0014** 14 Bit ST **1212** 12 Bit MT + 12 Bit ST **1213** 12 Bit MT + 13 Bit ST **1214** 12 Bit MT + 14 Bit ST	**E** DC 10 - 30 V	**Q.76** Square, IP67, 9.52 mm **Q.72** Square, IP67, 10 mm	**I2** Interbus K2 **K3** Interbus K3	**Z** Bus cover with 3 sealed cable exits

TECHNICAL DATASHEET

Stainless Steel Encoders AC 61 - Interbus Accessories

FLEXIBLE COUPLINGS



Bellows coupling



Helical coupling



Isolated disk coupling

		Ordering code
Bellows coupling	10 mm / 10 mm	3 520 037
Bellows coupling	8 mm / 10 mm	3 520 077
Helical coupling 25/32	6 mm / 10 mm	3 520 066
Helical coupling 25/32	10 mm / 12 mm	3 520 065
Helical coupling 25/32	10 mm / 10 mm	3 520 074
Isolated disk coupling	6 mm / 10 mm	3 520 082
Isolated disk coupling	10 mm / 10 mm	3 520 088

CONNECTING CABLES

Cable not made up with connectors	Ordering code
TPE cable, 12-core + screen	3 280 220 + length

MEASURING WHEELS

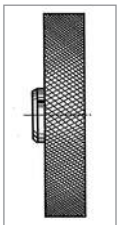

Tread 2 + 3

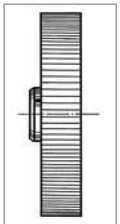

Tread 4

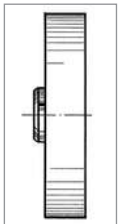

Tread 6

Tread 2 B
with glued-on rubber profile B = low-wear rubber surface with good grip (white)
Applications such as paper and cardboard, measuring cables, nongreasy metals, fleece, undressed or surface-treated wood, soft and hard plastics

Tread 3
vulcanized rubber surface with parallel knurl
Applications such as rubber, leather, fabrics, flooring and glass

Tread 4
Aluminum with parallel knurl
Applications such as rubber, soft plastics, wood with rough surface, and to a limited extent for fabrics

Tread 6
plastic surface
Applications such as wire, greasy metals and steel sections

Material	Bore diameter (mm) fitting to encoder shaft	Circumference	Tread	Width of bearing surface	Ordering code
Aluminum	10 mm	0.2 m	2 B	12 mm	0 601 049
Aluminum	10 mm	0.5 m	2 B	25 mm	0 601 151
Aluminum	10 mm	0.5 m	3	25 mm	0 601 156
Aluminum	12 mm	0.5 m	3	25 mm	0 601 159

TECHNICAL DATASHEET

Stainless Steel Encoders AC 61 - Interbus Accessories

MEASURING WHEELS (continued)

Material	Bore diameter (mm) fitting to encoder shaft	Circumference	Tread	Width of bearing surface	**Ordering code**
Aluminum	10 mm	0.5 m	6	25 mm	0 601 163
Aluminum	10 mm	0.5 yd	4	25 mm	0 601 157

TECHNICAL MANUALS

	Ordering code
Technical manual, German	2 565 217 (or homepage)