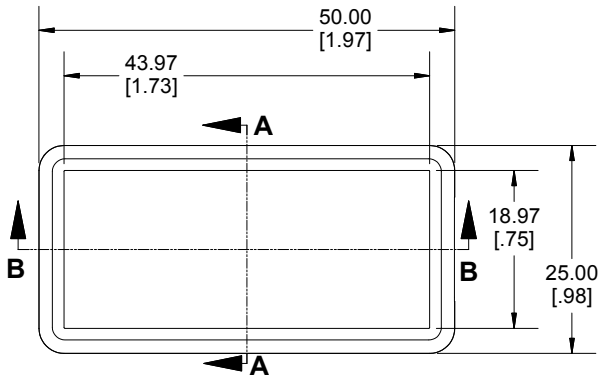

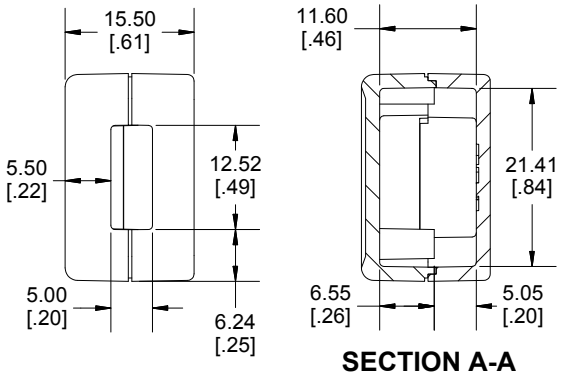

SECTION A-A

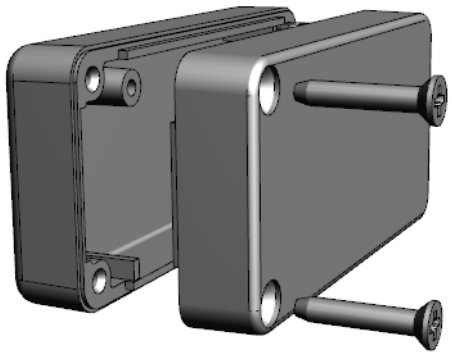

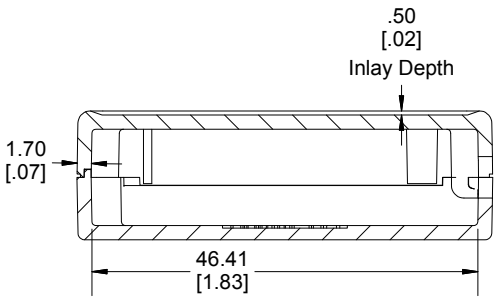

SECTION B-B

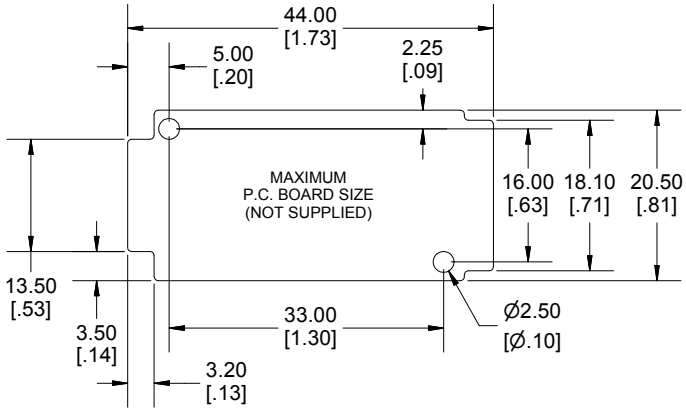

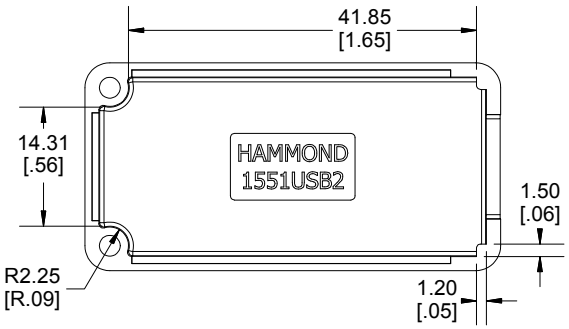

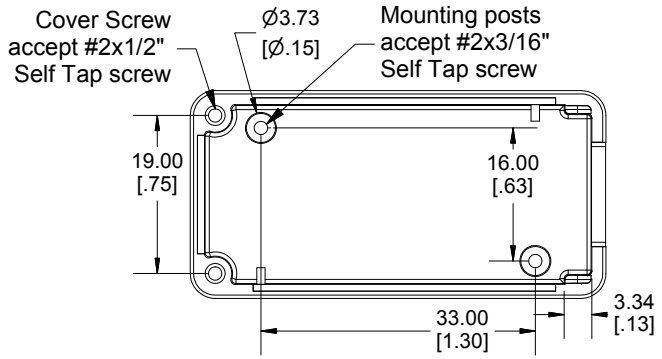

Enclosures can be Factory Modified (Milling, Drilling, Printing etc.)
Contact Factory mjm@hammondmfg.com for quotes
Solid models of this enclosure available in STEP or IGES.
(Part number and text placement/orientation on our products are subject to change, we do not recommend using them as a locating reference for modification purposes)

NOTE
Purchased assembly includes box, lid, 2 cover screws.
Enclosure molded from general purpose ABS Plastic.
Other materials / colours available consult factory.
Recommended Torque : (35-43) Ozf.in / (25-30) cN.m

PART NUMBERS	
1551USB2 Enclosure	
Black Enclosure - Ral 9011 - UL94 - HB	1551USB2BK
Gray Enclosure - RAL 7035 - UL94 - HB	1551USB2GY
Translucent Blue - UL94 - HB	1551USB2TBU
Translucent Clear - UL94 - HB	1551USB2CLR
Translucent Smoke - UL94 - HB	1551USB2TSK
Translucent Red - UL94 - HB	1551USB2TRD
ACCESSORIES	
P.C. Board Plastite Self Tapping Screw [#2 x 3/16" self-tapping (4.8mm)]	1553WTS100 (Pkg 100)
Plated Cover Screws #2 X 1/2" Self-tapping	1551USB50 (Pkg 50)
Black Cover Screws #2 X 1/2" Self-tapping	1551USB50BK (Pkg 50)

Dimensions:
mm
[inches]

HAMMOND MANUFACTURING®

1551USB2

www.hammondmfg.com