7000 series

Rocker and paddle switches



DISTINCTIVE FEATURES

Wide variety of actuators and terminals
Many mounting styles for panel or PCB
4 contact materials
8 electrical functions, maintained or momentary
UL and CSA approved - for VDE, refer to 57000



ELECTRICAL SPECIFICATIONS

- Current/voltage rating with resistive load :

Contact	Maximum	Minimum	Level *
Silver A	4 A 30 VDC	50 mA 10 VDC	III and IV
Silver, gold plated AD	4 A 30 VDC Gold plating withstands up to 100 mA 30 VDC	10 mA 50 mV 10 µA 5 V	I to IV
Brass, gold plated CD	0.4 VA at 20 VAC or DC	10 mA 50 mV 10 µA 5 V	I and II

* For details, see "Technical information" on website.

- For inductive, lamp or capacitive loads, consult factory.
- Initial contact resistance : 10 mΩ
- Insulation resistance : 1,000 MΩ min. at 500 VDC
- Dielectric strength :
  1,000 Vrms 50 Hz min. between terminals
  1,500 Vrms 50 Hz min. between poles
  1,500 Vrms 50 Hz min. between terminals and frame
- Contact bounce : 2 ms max.
- Electrical life : 50,000 cycles at full load

GENERAL SPECIFICATIONS

- Low level or mechanical life : 100,000 cycles
- Panel thickness : 1 (.039) to 2.5 mm(.098)
- Operating temperature : -40 °C to +85 °C (-40 °F to +185 °F)

The company reserves the right to change specifications without notice.

7000 series

Rocker and paddle switches

MATERIALS

- Case : diallylphthalate (DAP) or high temperature plastic material (UL94-V0)
- Actuator : polyamide
- Housing : stainless steel or steel tin plated
- Bracket : steel, tin plated
- Contacts :

A : silver
AD : silver, gold plated
CD : brass, gold plated
X601 : brass, silver plated

- Terminal seal : epoxy

APEM products may be recycled at end-of-life for the re-claiming of valuable metal components.

AGENCY APPROVALS

3 A 250 VAC
6 A 125 VAC

For VDE, refer to 57000 series.
Availability : consult factory for details of approved models.
Marking : to order switches marked UL or CSA, complete appropriate box of ordering format.

ELECTRICAL FUNCTIONS

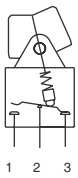

TERMINALS

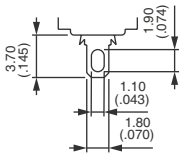

Solder lug

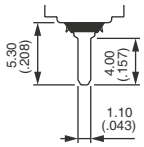

Straight PC

7000 series

Rocker and paddle switches

PANEL CUT-OUT

7600 - 7200 - 7400 - 7200Z MODELS

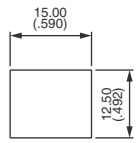

With or without bezel **U1200**

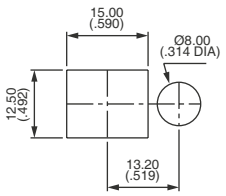

With bezel **U1210**

7700 - 7900 MODELS

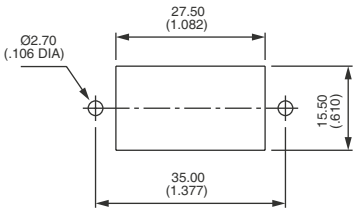

7700N - 7900N MODELS

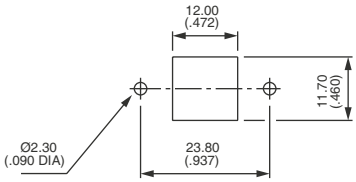

With small rocker **U730**
or small paddle **U700**

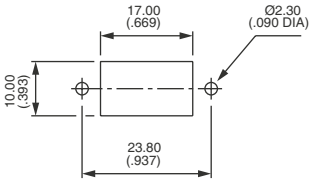

With medium rocker **U620**
or medium paddle **U610**

7900W AND 7000Y - Y6 MODELS

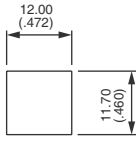

With small rocker **U730**
or small paddle **U700**

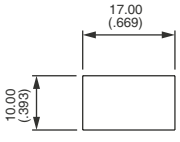

With medium rocker **U620**
or medium paddle **U610**

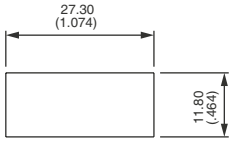

With large rocker **U1010**

7000 series

Rocker and paddle switches

BUILD YOUR PART NUMBER

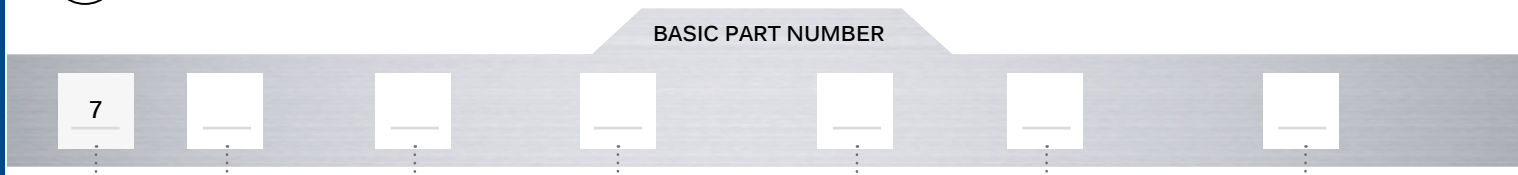

SERIES

TERMINALS

0	Right angle terminals or straight PC terminals with bracket
2	Straight PC or quick-connect terminals, 4.7 (.185) terminal spacing, snap-in mounting
6	Solder lug terminals, snap-in mounting
7	Solder lug terminals, panel mounting
9	Straight PC or quick-connect terminals, 4.7 (.185) terminal spacing, panel mounting Right angle terminals

NUMBER OF POLES

3	Single pole
4	Double pole

Consult factory for three and four pole models.

ELECTRICAL FUNCTIONS

6	ON	-	ON
9	ON	OFF	ON
7	MOM	OFF	MOM
8	ON	OFF	MOM
2	ON	-	MOM
4	ON ON MOM	ON ON ON	ON MOM ▲ MOM ▲

Function 4
.Must not have blank in "connections" box.
▲ Must not have blank in "momentary" box.

TERMINALS

Blank	Solder lugs or straight PC depending on model
W	Right angle, horizontal mounting (7900 switches)
Y Y6	Bracket mounting (7000 switches)

MOUNTING PLATE

N	Mounting with small plate

CONNECTIONS FOR FUNCTION 4

TH	Standard
CT	Reversed

For functions 4, 41R, 42R Leave blank for all other functions.

MOMENTARY FOR FUNCTION 4

1R	ON ON MOM
2R	MOM ON MOM

Leave blank for other functions.

7000 series

Rocker and paddle switches

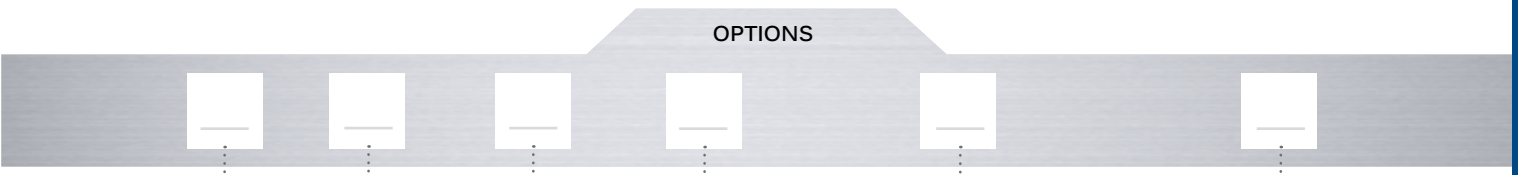

OPTIONS

CONTACT MATERIALS

A	Silver
AD	Silver, gold plated
CD	Brass, gold plated

SEALING

Blank	No sealing
B	Epoxy sealed terminals

SPECIAL OPTIONS

Blank	No special requirement
X601	Silver plated brass contacts

AGENCY APPROVALS

UL, CSA	Availability : Consult factory for details of approved models. For VDE, refer to 57000.

ACTUATORS

ROCKERS

U530	Large
U620	Medium
U730	Small
U1010	Large

PADDLES

U490	Large
U610	Narrow
U700	Broad

BEZELS - MOUNTING ACCESSORIES

BEZELS FOR ROCKER U730 OR PADDLE U700

U1200	
U1210	For LED

ACCESSORIES FOR PANEL MOUNTING MODELS

U543	Spacer + nut + screw
U1022	Spacer + nut + screw + washer

ABOUT THIS SERIES

On the following pages, you will find successively basic part numbers of switches and options in the same order as in above chart.

Notice : please note that not all combinations of above numbers are available. Refer to the following pages for further information.

7000 series

Rocker and paddle switches

SNAP-IN MOUNTING
SOLDER LUG TERMINALS : 7600



Single pole	Double pole	III 2-3 5-6	II	I 1-2 4-5
7636	7646	ON	-	ON
7639	7649	ON	OFF	ON
7637	7647	MOM	OFF	MOM
7638	7648	ON	OFF	MOM
7632	7642	ON	-	MOM
	7644*	ON	ON	ON
	7644 1R*	ON	ON	MOM
	7644 2R*	MOM	ON	MOM

Shown with rocker U730 and bezel U1200

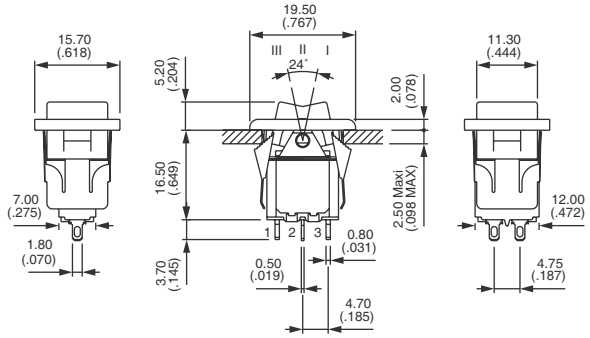

SNAP-IN MOUNTING - STRAIGHT PC TERMINALS
SPACING 4.7 (.185) : 7200



Single pole	Double pole	III 2-3 5-6	II	I 1-2 4-5
7236 B	7246 B	ON	-	ON
7239 B	7249 B	ON	OFF	ON
7237 B	7247 B	MOM	OFF	MOM
7238 B	7248 B	ON	OFF	MOM
7232 B	7242 B	ON	-	MOM
	7244 B*	ON	ON	ON
	7244 1R B*	ON	ON	MOM
	7244 2R B*	MOM	ON	MOM

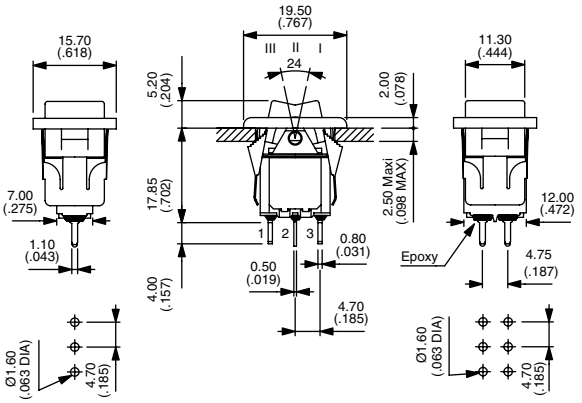

PANEL MOUNTING - LARGE ACTUATOR
SOLDER LUG TERMINALS : 7700



Single pole	Double pole	III 2-3 5-6	II	I 1-2 4-5
7736	7746	ON	-	ON
7739	7749	ON	OFF	ON
7737	7747	MOM	OFF	MOM
7738	7748	ON	OFF	MOM
7732	7742	ON	-	MOM
	7744*	ON	ON	ON
	7744 1R*	ON	ON	MOM
	7744 2R*	MOM	ON	MOM

Shown with rocker U530

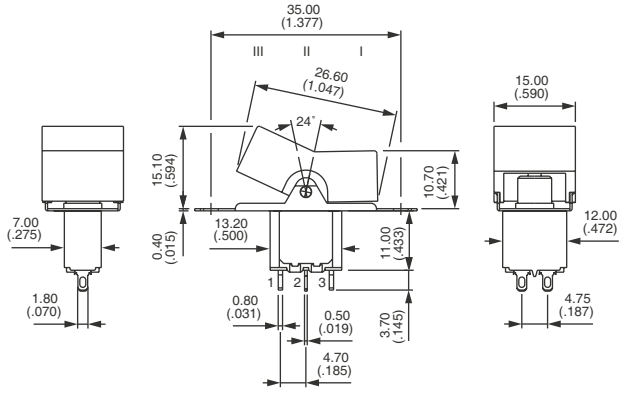

PANEL MOUNTING - LARGE ACTUATOR
STRAIGHT PC TERMINALS : 7900



Single pole	Double pole	III 2-3 5-6	II	I 1-2 4-5
7936 B	7946 B	ON	-	ON
7939 B	7949 B	ON	OFF	ON
7937 B	7947 B	MOM	OFF	MOM
7938 B	7948 B	ON	OFF	MOM
7932 B	7942 B	ON	-	MOM
	7944 B*	ON	ON	ON
	7944 1R B*	ON	ON	MOM
	7944 2R B*	MOM	ON	MOM

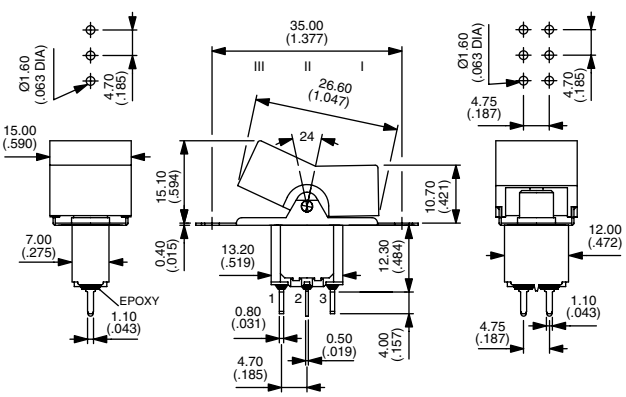

* Function 4 : SP in DP case, specify CT or TH connections, see “Technical information“ on website.

7000 series

Rocker and paddle switches

PANEL MOUNTING - MEDIUM ACTUATOR SOLDER LUG TERMINALS : 7700N



Single pole	Double pole	III 2-3 5-6	II	I 1-2 4-5
7736N	7746N	ON	-	ON
7739N	7749N	ON	OFF	ON
7737N	7747N	MOM	OFF	MOM
7738N	7748N	ON	OFF	MOM
7732N	7742N	ON	-	MOM
	7744N*	ON	ON	ON
	7744N 1R*	ON	ON	MOM
	7744N 2R*	MOM	ON	MOM

Shown with rocker U620

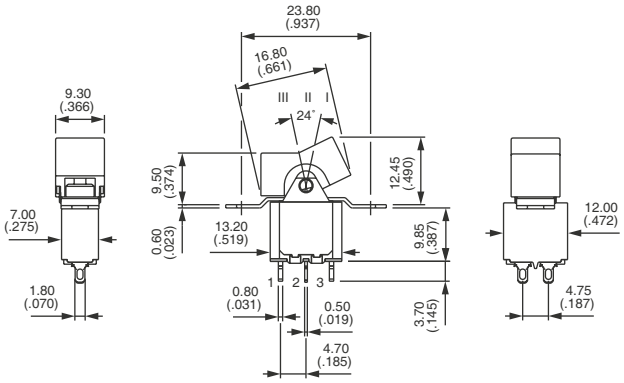

PANEL MOUNTING - MEDIUM ACTUATOR STRAIGHT PC TERMINALS : 7900N



Single pole	Double pole	III 2-3 5-6	II	I 1-2 4-5
7936N B	7946N B	ON	-	ON
7939N B	7949N B	ON	OFF	ON
7937N B	7947N B	MOM	OFF	MOM
7938N B	7948N B	ON	OFF	MOM
7932N B	7942N B	ON	-	MOM
	7944N B*	ON	ON	ON
	7944N 1R B*	ON	ON	MOM
	7944N 2R B*	MOM	ON	MOM

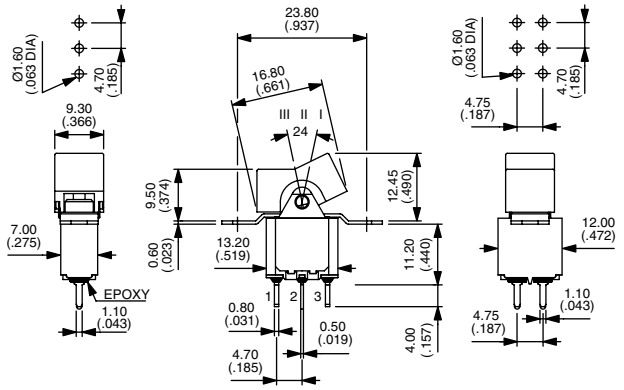

RIGHT ANGLE TERMINALS - HORIZONTAL SINGLE POLE



	III 2-3	II	I 1-2
7936W	ON	-	ON
7939W	ON	OFF	ON
7937W	MOM	OFF	MOM
7938W**	ON	OFF	MOM
7932W**	ON	-	MOM

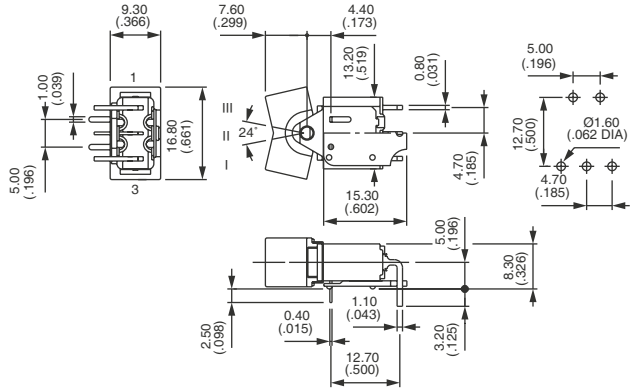

RIGHT ANGLE TERMINALS - HORIZONTAL DOUBLE POLE



	III 2-3 5-6	II	I 1-2 4-5
7946W	ON	-	ON
7949W	ON	OFF	ON
7947W	MOM	OFF	MOM
7948W**	ON	OFF	MOM
7942W**	ON	-	MOM
7944W*	ON	ON	ON
7944 1RW*	ON	ON	MOM
7944 2RW*	MOM	ON	MOM

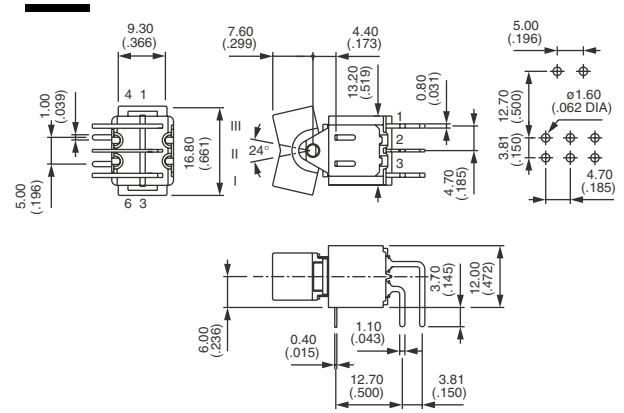

* Function 4 : SP in DP case, specify CT or TH connections, see "Technical information" on website.
** Functions 2 and 8 : standard connection (CT) shown on drawing - reversed connection available. Consult factory.

7000 series

Rocker and paddle switches

SHORT BRACKET - WIDTH 15.75 (.620) - SINGLE POLE : 7030Y



	III 2-3 5-6	II	I 1-2 4-5
7036Y B	ON	-	ON
7039Y B	ON	OFF	ON
7037Y B	MOM	OFF	MOM
7038Y B	ON	OFF	MOM
7032Y B	ON	-	MOM

Shown with rocker U620

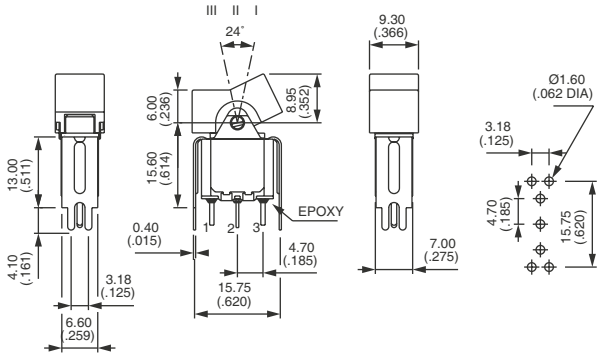

SHORT BRACKET - WIDTH 15.75 (.620) - DOUBLE POLE : 7040Y



	III 2-3 5-6	II	I 1-2 4-5
7046Y B	ON	-	ON
7049Y B	ON	OFF	ON
7047Y B	MOM	OFF	MOM
7048Y B**	ON	OFF	MOM
7042Y B**	ON	-	MOM
7044Y B*	ON	ON	ON
7044Y 1R B*	ON	ON	MOM
7044Y 2R B*	MOM	ON	MOM

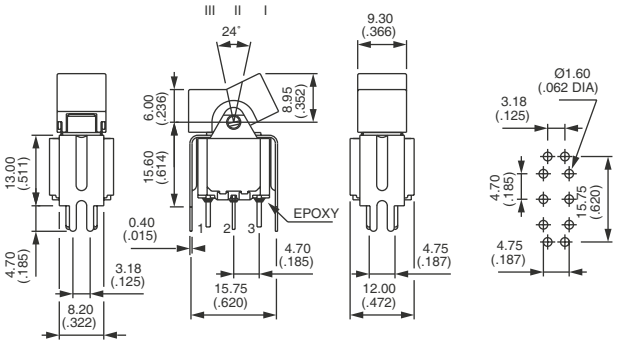

SHORT BRACKET - WIDTH 19.05 (.750) : 7000Y6

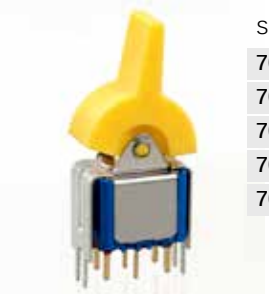

Single pole	Double pole	III 2-3 5-6	II	I 1-2 4-5
7036Y6 B	7046Y6 B	ON	-	ON
7039Y6 B	7049Y6 B	ON	OFF	ON
7037Y6 B	7047Y6 B	MOM	OFF	MOM
7038Y6 B	7048Y6 B**	ON	OFF	MOM
7032Y6 B	7042Y6 B**	ON	-	MOM
	7044Y6 B*	ON	ON	ON
	7044Y6 1R B*	ON	ON	MOM
	7044Y6 2R B*	MOM	ON	MOM

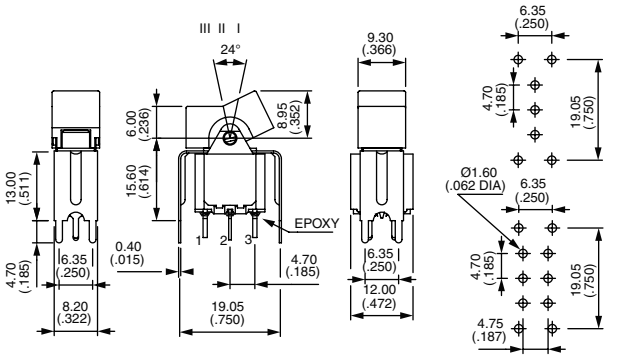

* Function 4 : SP in DP case, specify CT or TH connections, see "Technical information" on website.

7000 series

Rocker and paddle switches

CONTACT MATERIALS

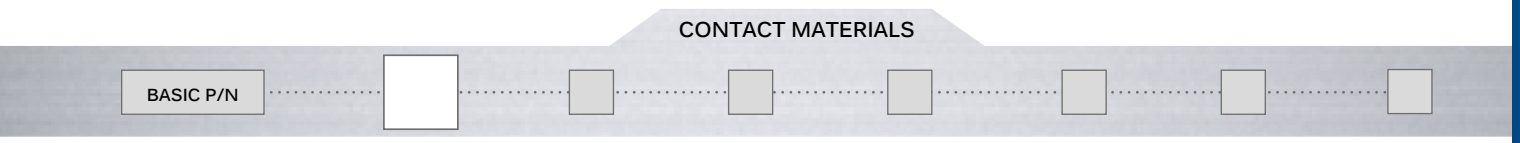

A	Silver
AD	Silver, gold plated
CD	Brass, gold plated

SEALING

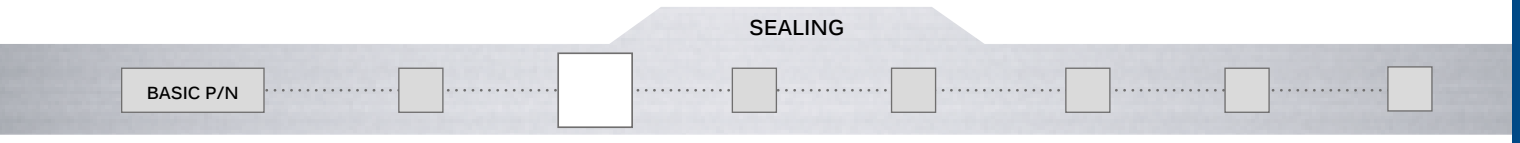

Blank	No sealing
B	Epoxy sealed terminals



B

SPECIAL OPTIONS

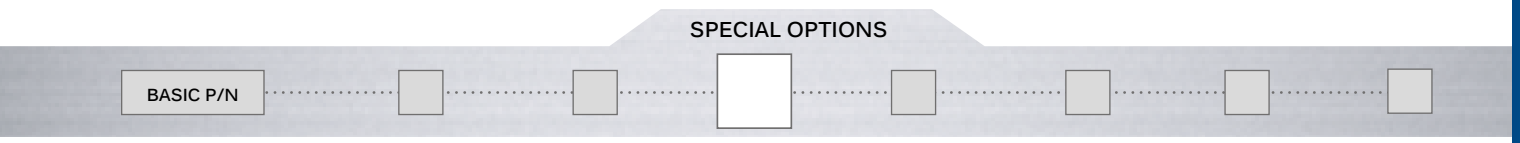

Blank	No special requirement
X601	Silver plated brass contacts Current voltage rating for an electrical life of 20,000 cycles : 0.5 A 30 VDC Minimum quantity : 5,000 pieces per model and shipment.

AGENCY APPROVALS

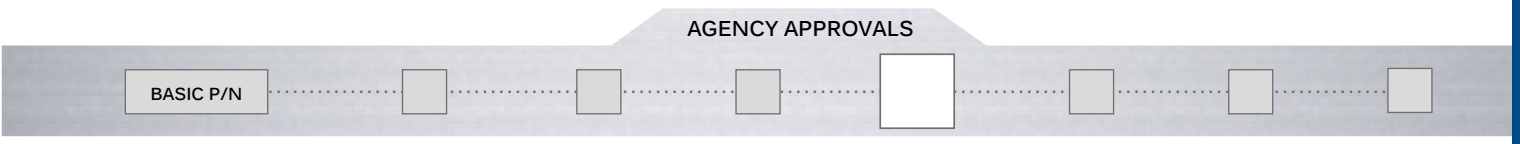

UL	All standard models
CSA	All standard models
Blank	No agency approval required.

Availability
Consult factory for details of approved combinations or options.

Marking
To order switches marked UL or CSA, complete above box with desired approvals in this order, without space (ex. ULCSA).

VDE (with UL & CSA) : Refer to **57000** series.

7000 series

Rocker and paddle switches

ACTUATORS

BASIC P/N ..... + U...

For actuator color,
replace last "0" by number :

1	Blue
1/4	Dark blue
2	Black
3	Green
4	Grey
5	Yellow
6	Red
7	Ivory
7/1	White
9	Orange

FOR SNAP-IN MOUNTING MODELS : 7600 - 7200 - 7400

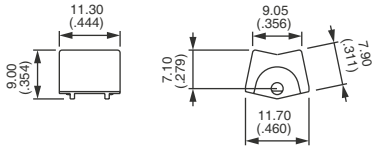

U730
Small rocker

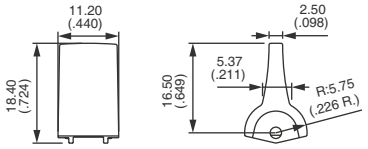

U700
Broad paddle

FOR 7700 AND 7900 MODELS

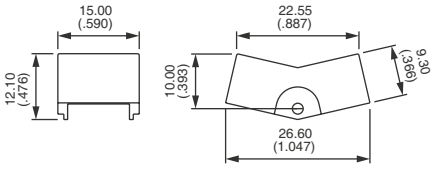

U530
Large rocker

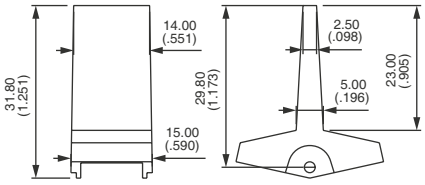

U490
Large paddle

FOR 7700N - 7900N - 7900W AND 7000Y MODELS

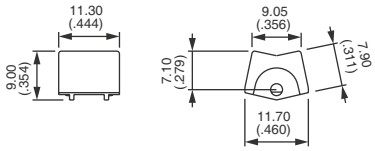

U730
Small rocker

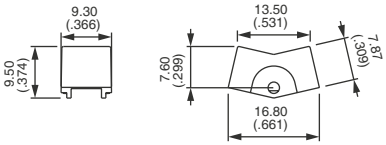

U620
Medium rocker

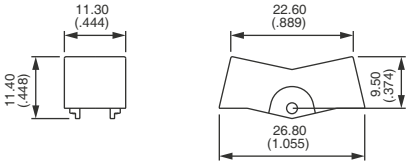

U1010
Large rocker
For 7900W, available on DP only.

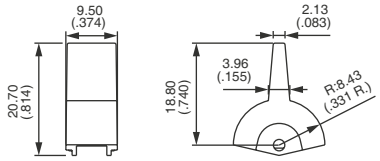

U610
Narrow paddle

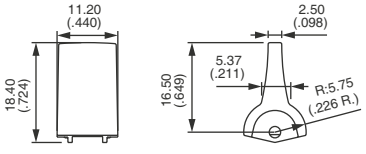

U700
Broad paddle

7000 series

Rocker and paddle switches

BEZELS

BASIC P/N + U...

For bezels color, replace last "0" by number :

1	Blue
1/4	Dark blue
2	Black
3	Green
4	Grey
5	Yellow
6	Red
7	Ivory
7/1	White
9	Orange

BEZELS FOR PADDLE U700 AND ROCKER U730

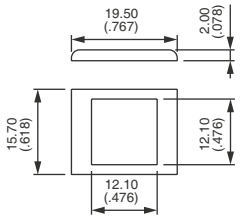

U1200

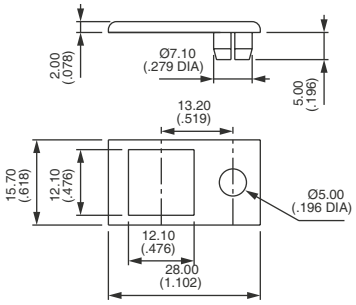

U1210
For LED Ø 5 (.196) - not supplied

STANDARD PANEL MOUNTING

Panel thickness with bezel 1 to 2.5 mm (.039 to .098)

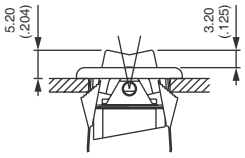

U730 + U1200

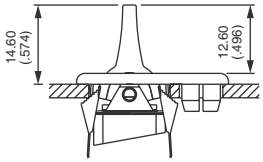

U700 + U1210

MOUNTING ACCESSORIES

BASIC P/N + U...

FOR ROCKER U530 OR PADDLE U490

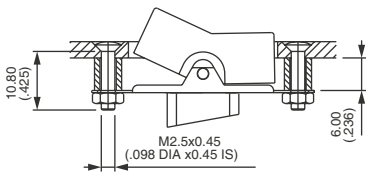

U543
Spacers, screws and nuts

FOR ROCKERS U620 OR U730, FOR PADDLES U610 OR U700

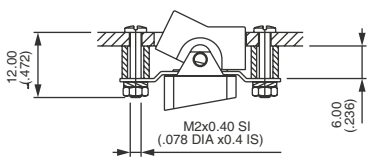

U1022
Spacers, screws, nut and washers