




# Changeover switch, 1p, Ie=12A, FS HAND-0-AUTO, 45°, maintained, 48x48 mm, flush mounting

**Part no.** T0-1-15431/E
**Article no.** 019872
**Catalog No.** CT01-15431-DOKBUQ

## Delivery programme

| | | | |
|---|---|---|---|
| Product range | | | Control switches |
| Part group reference | | | T0 |
| Basic function | | | Changeoverswitches |
| | | | with black thumb grip and front plate<br>With 0 (Off) position |
| Main circuits<br>Poles | | | 1 |
| Degree of Protection | | | Front IP65 |
| Design | | | flush mounting |
| | | | 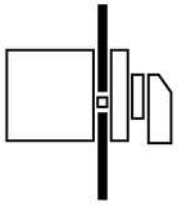 |
| Contact sequence | | | 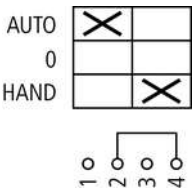 |
| Motor rating AC-23A, 50 - 60 Hz | | | |
| 400 V | P | kW | 6.5 |
| Rated uninterrupted current | $I_u$ | A | 20 |

## Approvals

| | |
|---|---|
| Product Standards | UL 508; CSA-C22.2 No. 14-05; CSA-C22.2 No. 94; IEC/EN 60947-3; CE marking |
| UL File No. | E36332 |
| UL Category Control No. | NLRV |
| CSA File No. | 12528 |
| CSA Class No. | 3211-05 |
| North America Certification | UL listed, CSA certified |
| Specially designed for North America | Yes, in combination with "+NA" (105864) |
| Degree of Protection | IEC: IP65; UL/CSA Type 1, 3R, 12 |

## General

| | | | |
|---|---|---|---|
| Standards | | | IEC/EN 60947, VDE 0660, IEC/EN 60204, CSA, UL<br>Switch-disconnector according to IEC/EN 60947-3 |
| Climatic proofing | | | Damp heat, constant, to IEC 60068-2-78<br>Damp heat, cyclic, to IEC 60068-2-30 |
| Ambient temperature | | °C | |
| Open | | °C | -25 - +50 |
| Enclosed | | °C | -25 - +40 |
| Overvoltage category/pollution degree | | | III/3 |
| Rated impulse withstand voltage | $U_{imp}$ | V AC | 6000 |
| Mechanical shock resistance | | g | 15 |
| Mounting position | | | As required |
| Protection against direct contact when actuated from front (EN 50274) | | | Finger and back-of-hand proof |

## Contacts

| | | | |
|---|---|---|---|
| Mechanical variables | | | |
| Main circuits<br>Poles | | | 1 |
| Electrical characteristics | | | |
| Rated operational voltage | $U_e$ | V AC | 690 |
| Rated uninterrupted current | $I_u$ | A | 20 |
| Note on rated uninterrupted current $I_u$ | | | Rated uninterrupted current Iu is specified for max. cross-section. |
| Load rating with intermittent operation, class 12 | | | |
| AB 25 % DF | | x $I_e$ | 2 |
| AB 40 % DF | | x $I_e$ | 1.6 |
| AB 60 % DF | | x $I_e$ | 1.3 |
| Short-circuit rating | | | |
| Fuse | | A gG/gL | 20 |
| Rated short-time withstand current (1 s current) | $I_{cw}$ | $A_{rms}$ | 320 |
| Note on rated short-time withstand current Icw | | | Current for a time of 1 second |

## Switching capacity

| | | | |
|---|---|---|---|
| cos φ rated making capacity as per IEC 60947-3 | | A | 130 |
| Rated breaking capacity cos φ to IEC 60947-3 | | A | |
| 230 V | | A | 100 |
| 400/415 V | | A | 110 |
| 500 V | | A | 80 |
| 690 V | | A | 60 |
| Safe isolation to EN 61140 | | | |
| between the contacts | | V AC | 440 |
| Current heat loss per contact at $I_e$ | | W | 0.6 |
| Current heat loss per auxiliary circuit at $I_e$ (AC-15/230 V) | | CO | 0.6 |
| Lifespan, mechanical | Operations | x $10^6$ | > 0.4 |
| Maximum operating frequency | Operations/h | | 1200 |
| AC | | | |
| AC-3 | | | |
| Rating, motor load switch | P | kW | |
| 220 V 230 V | P | kW | 3 |
| 230 V Star-delta | P | kW | 4 |
| 400 V 415 V | P | kW | 4 |
| 400 V Star-delta | P | kW | 5.5 |
| 500 V | P | kW | 5.5 |
| 500 V Star-delta | P | kW | 7.5 |
| 690 V | P | kW | 4 |
| 690 V Star-delta | P | kW | 5.5 |
| Rated operational current motor load switch | | | |
| 230 V | $I_e$ | A | 11.5 |
| 230 V star-delta | $I_e$ | A | 14.8 |

| | | | |
|---|---|---|---|
| 400V 415 V | $I_e$ | A | 11.5 |
| 400 V star-delta | $I_e$ | A | 11.3 |
| 500 V | $I_e$ | A | 9 |
| 500 V star-delta | $I_e$ | A | 12.1 |
| 690 V | $I_e$ | A | 4.9 |
| 690 V star-delta | $I_e$ | A | 6.5 |
| AC-15 | | | |
| Rated operational current control switch | | | |
| 230 V | $I_e$ | A | 6 |
| 400 V 415 V | $I_e$ | A | 4 |
| 500 V | $I_e$ | A | 2 |
| AC-21A | | | |
| Rated operational current switch | | | |
| 440 V | $I_e$ | A | 20 |
| AC-23A | | | |
| Motor rating AC-23A, 50 - 60 Hz | P | kW | |
| 230 V | P | kW | 3.5 |
| 400 V 415 V | P | kW | 6.5 |
| 500 V | P | kW | 7.5 |
| 690 V | P | kW | 6.5 |
| Rated operational current motor load switch | | | |
| 230 V | $I_e$ | A | 13.3 |
| DC | | | |
| DC-1, Load-break switches L/R = 1 ms | | | |
| Rated operational current | $I_e$ | A | 10 |
| Voltage per contact pair in series | | V | 60 |
| DC-21A | $I_e$ | A | |
| Rated operational current | $I_e$ | A | 1 |
| Contacts | | Quantity | 1 |
| DC-23A, motor load switch L/R = 15 ms | | | |
| 24 V | | | |
| Rated operational current | $I_e$ | A | 10 |
| Contacts | | Quantity | 1 |
| 48 V | | | |
| Rated operational current | $I_e$ | A | 10 |
| Contacts | | Quantity | 2 |
| 60 V | | | |
| Rated operational current | $I_e$ | A | 10 |
| Contacts | | Quantity | 3 |
| 120 V | | | |
| Rated operational current | $I_e$ | A | 5 |
| Contacts | | Quantity | 3 |
| 240 V | | | |
| Rated operational current | $I_e$ | A | 5 |
| Contacts | | Quantity | 5 |
| DC-13, Control switches L/R = 50 ms | | | |
| Rated operational current | $I_e$ | A | 10 |
| Voltage per contact pair in series | | V | 32 |
| Control circuit reliability at 24 V DC, 10 mA | Fault probability | $H_F$ | $< 10^{-5}$, < 1 fault in 100000 operations |

## Terminal capacities

| | | | |
|---|---|---|---|
| Solid or stranded | | $mm^2$ | 1 x (1 - 2,5)<br>2 x (1 - 2,5) |
| Flexible with ferrules to DIN 46228 | | $mm^2$ | 1 x (0.75 - 2.5)<br>2 x (0.75 - 2.5) |

| | | | |
|---|---|---|---|
| Terminal screw | | | M3.5 |
| Max. tightening torque | | Nm | 1 |

## Technical safety parameters:

| | | | |
|---|---|---|---|
| **Notes** | | | $B10_d$ values as per EN ISO 13849-1, table C1 |

## Technical data ETIM 5.0

Low-voltage industrial components (EG000017) / Control switch (EC002611)

Electric engineering, automation, process control engineering / Low-voltage switch technology / Off-load switch, circuit breaker, control switch / Control switch (ecl@ss8-27-37-14-14 [ACN998007])

| | | | |
|---|---|---|---|
| Switch function | | | Reverser |
| Number of poles | | | 1 |
| Max. rated operation voltage Ue AC | | V | 690 |
| Rated permanent current Iu | | A | 20 |
| Number of switch positions | | | 3 |
| With 0 (off) position | | | Yes |
| With retraction in 0-position | | | No |
| Device construction | | | Built-in device |
| Width in number of modular spacings | | | 0 |
| Suitable for ground mounting | | | No |
| Suitable for front mounting 4-hole | | | Yes |
| Suitable for distribution board installation | | | No |
| Suitable for intermediate mounting | | | No |
| Complete device in housing | | | No |
| Type of control element | | | Toggle |
| Front shield size | | | 48x48 mm |
| Degree of protection (IP), front side | | | IP65 |

## Dimensions

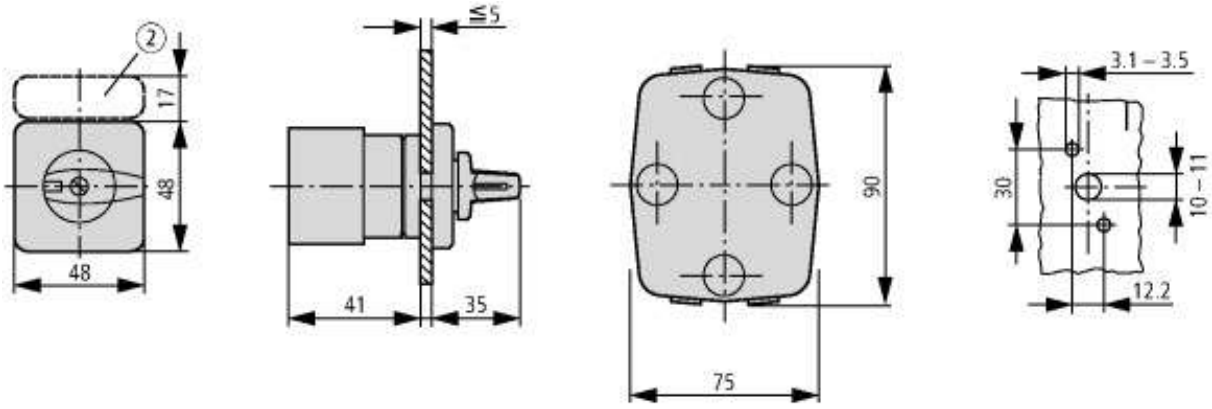


2 ZFS-... Label mount not included as standard

## Additional product information (links)

**IL03801020Z (AWA1150-0586) Cam switch: Mounting**

| | |
|---|---|
| IL03801020Z (AWA1150-0586) Cam switch: Mounting | ftp://ftp.moeller.net/DOCUMENTATION/AWA_INSTRUCTIONS/IL03801020Z2013_02.pdf |
| Form for ordering non-standard front plates | http://ecat.moeller.net/flip-cat/?edition=HPLEN&startpage=4.87 |
| Display flip catalog page. | http://ecat.moeller.net/flip-cat/?edition=K115A&startpage=108 |
| Technical overview cam switch, switch-disconnector | http://de.ecat.moeller.net/flip-cat/?edition=HPLTEv1&startpage=4.2 |
| System overview cam switch T | http://de.ecat.moeller.net/flip-cat/?edition=HPLTEv1&startpage=4.4 |
| System overview switch-disconnector P | http://de.ecat.moeller.net/flip-cat/?edition=HPLTEv1&startpage=4.6 |
| Key to part numbers Cam switch | http://de.ecat.moeller.net/flip-cat/?edition=HPLTEv1&startpage=4.8 |
| Key to part numbers Switch-disconnector | http://de.ecat.moeller.net/flip-cat/?edition=HPLTEv1&startpage=4.8 |
| UL/CSA: Rating data for approved types | http://ecat.moeller.net/flip-cat/?edition=HPLTF&startpage=4.98 |


© 09/2014 by Eaton Industries GmbH