DMED300T2MID

ENERGY METER, THREE PHASE WITH NEUTRAL, NON EXPANDABLE, MID CERTIFIED, 80A DIRECT CONNECTION, 4U, 2 PROGRAMMABLE STATIC OUTPUTS, MULTI-MEASUREMENTS



Product designation			Three-phase energy meters
Product type designation			DMED300T2MID
Type			Three-phase + neutral
DIN rail module number			4
Auxiliary supply Us			
Operational frequency			
	min	Hz	50
Power consumption			
	Max	VA	20
Power dissipation Max		W	1.35
Measuring voltage inputs			
Rated voltage (Ue)			
	phase-phase	VAC	400
	phase-neutral	VAC	230
Operating voltage range			
	phase-phase	VAC	323…456
	phase-neutral	VAC	187…264
Connection method			Direct
Current			
IEC maximum (Imax)		A	80
IEC minimum (Imin)		A	0.5
IEC rated (Iref-lb)		A	10
IEC start (Ist)		mA	40
Transition (Itr)		A	1
Accuracy			
Measurement conditions (T +23°C ±1°C / Rel. Humidity 45 ±15% R.H.)			
	active energy		Class B (EN50470-3)
	reactive energy		Class 2 (IEC/EN 62053-23)
Output characteristics			
LED Pulse rate		pulse/kWh	1000
LED Pulse duration		ms	30
Static output pulse rate		pulse/kWh	1-10-100-1000 programmable
Static output pulse duration		ms	100 for 1-10-10 pulse; 60 for 1000 pulse
Static output external voltage		VDC	10…30
Static outputs Maximum current		mA	50
Insulations			
Rated insulation voltage Ui IEC/EN		V	250
Rated impulse withstand voltage Uimp		kV	6
Operating frequency withstand voltage		kV	4

The characteristics described in this document are subject to updates or modifications at any time. The descriptions, technical and functional information, illustrations and instructions in this brochure are purely illustrative, and are consequently not contractually binding

DMED300T2MID

ENERGY METER, THREE PHASE WITH NEUTRAL, NON EXPANDABLE, MID CERTIFIED, 80A DIRECT CONNECTION, 4U, 2 PROGRAMMABLE STATIC OUTPUTS, MULTI-MEASUREMENTS

Mechanical features

Housing type				Polyamide
Terminals type				Fixed
Conductor cross section				
		min	mm²	2.5
		Max	mm²	16
		min	AWG	16
		Max	AWG	6
Tightening torque (Max)				
			Nm	2
			lbin	14
Fixing				DIN rail
Weight			g	360

Ambient conditions

Temperature				
	Operating temperature			
		min	°C	-25
		max	°C	+55
	Storage temperature			
		min	°C	-25
		max	°C	+70
Relative humidity			%	<80
Maximum Pollution degree				2
Mechanical environment				Class M1
Magnetic environment				Class E1

Dimensions

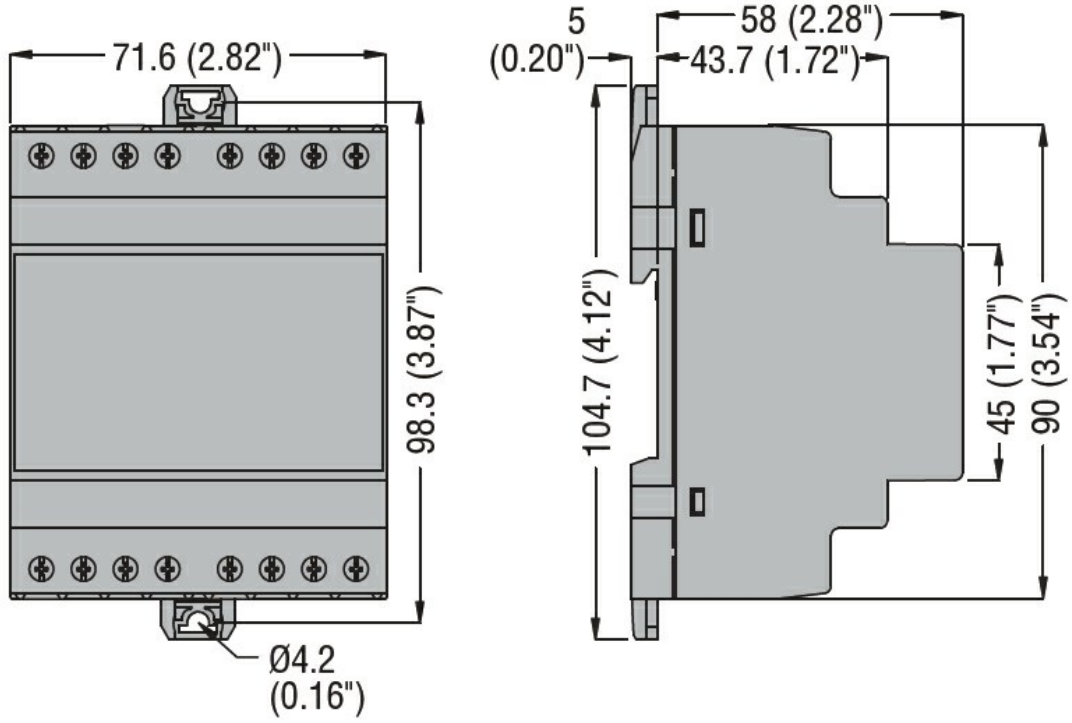

Wiring diagrams

The characteristics described in this document are subject to updates or modifications at any time. The descriptions, technical and functional information, illustrations and instructions in this brochure are purely illustrative, and are consequently not contractually binding

DMED300T2MID

ENERGY METER, THREE PHASE WITH NEUTRAL, NON EXPANDABLE, MID CERTIFIED, 80A DIRECT CONNECTION, 4U, 2 PROGRAMMABLE STATIC OUTPUTS, MULTI-MEASUREMENTS

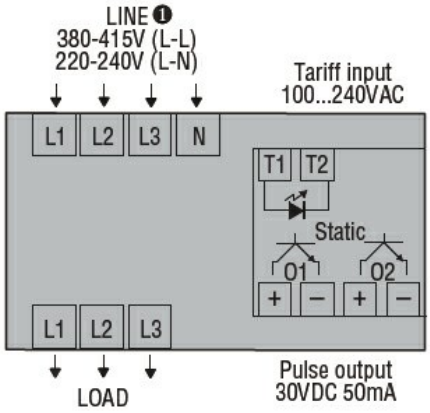

Certifications and compliance

Compliance

EN50470-1
EN50470-3
TR 50579

Certificates

EAC
MID (moduli B + D)
RCM

ETIM classification

ETIM 8.0	EC001506 - Kilowatt-hour meter

The characteristics described in this document are subject to updates or modifications at any time. The descriptions, technical and functional information, illustrations and instructions in this brochure are purely illustrative, and are consequently not contractually binding