DN4237

Switched-mode power supply 24 V DC

PSU-3AC/24VDC-20A/IOL/IP67

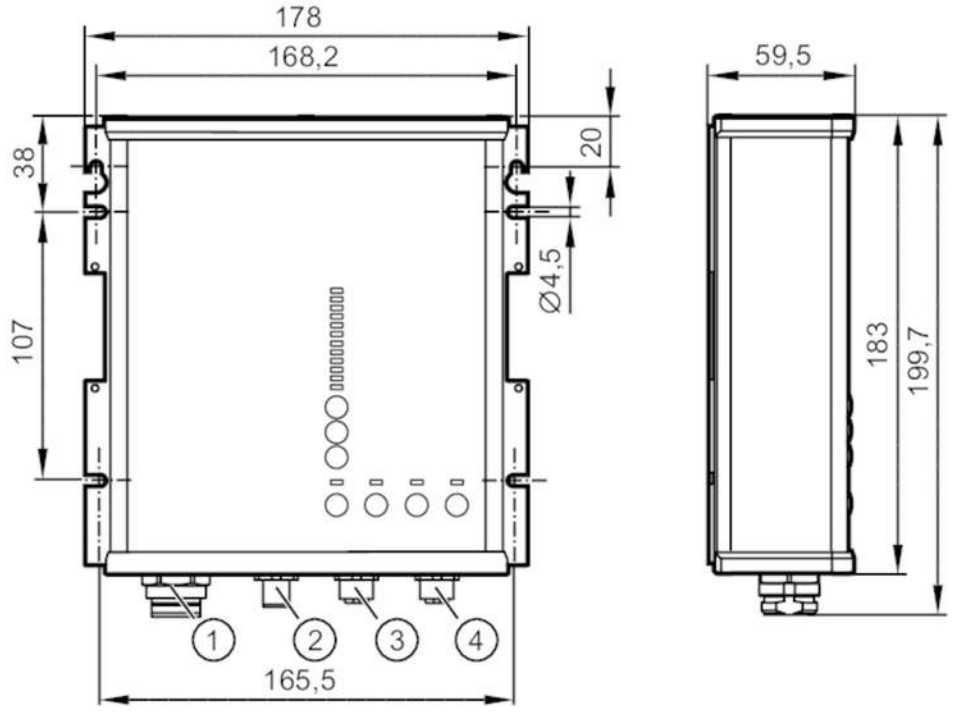

1 power supply
2 IO-Link
3 Output voltage
4 Output voltage

Electrical data		
Nominal voltage AC	[V]	400 / 480
Nominal frequency AC	[Hz]	50...60
Input voltage range AC	[V]	323...552
Output voltage DC	[V]	24...28
Protection class		I
Max. power-on delay time	[ms]	12
Output voltage tolerance	[%]	0.2
Max. output current at min. output voltage	[A]	20.8
Max. output current at max. output voltage	[A]	17.8
Output power (permanent)	[W]	500
Output power (peak)	[W]	1000
Power factor (nominal voltage 400 V AC / 50 Hz)		0.94
Power factor (nominal voltage 480 V AC / 50 Hz)		0.95
Number of output circuits		4
Switch-on peak current (nominal voltage 400 V AC / 60 Hz)	[A]	2.1

DN4237

Switched-mode power supply 24 V DC

PSU-3AC/24VDC-20A/IOL/IP67

Switch-on peak current (nominal voltage 480 V AC / 50 Hz)	[A]	2
Efficiency (nominal voltage 400 V AC / 60 Hz)	[%]	94.2
Efficiency (nominal voltage 480 V AC / 50 Hz)	[%]	94
Mains buffering time (nominal voltage 400 V AC / 60 Hz)	[ms]	24
Mains buffering time (nominal voltage 480 V AC / 50 Hz)	[ms]	24
Input current (nominal voltage 400 V AC / 60 Hz)	[A]	1.1
Input current (nominal voltage 480 V AC / 50 Hz)	[A]	0.9
Outputs		
Load capacitance, total	[mF]	12.5
Interfaces		
Communication interface		IO-Link
Unterstützte Masterportklasse		A
Transmission type		COM3 (230,4 kBaud)
IO-Link revision		1.1
SIO mode		yes
Min. process cycle time	[ms]	2
Operating conditions		
Ambient temperature	[°C]	-25...70
Storage temperature	[°C]	-40...85
Max. relative air humidity	[%]	95; (relative humidity)
Max. height above sea level	[m]	5000
Protection		IP 65; IP 67
Pollution degree		3

DN4237

Switched-mode power supply 24 V DC

PSU-3AC/24VDC-20A/IOL/IP67

Tests / approvals		
EMC	EN 61000-4-2 CD	8 kV / failure criterion A
	EN 61000-4-2 AD	15 kV / failure criterion A
	EN 61000-4-3	80 Mhz...2.7 GHz / 20 V/m failure criterion A
	EN 61000-4-3	2.7 GHz...6 GHz kV / 10 V/m failure criterion A
	EN 61000-4-8	50 / 60 Hz / 30 A/m failure criterion A
	EN 61000-4-4 Burst	4 kV / failure criterion A
	EN 61000-4-5 Surge	2 kV Lx / Ly / failure criterion A
	EN 61000-4-5 Surge	4 kV L / PE / failure criterion A
	EN 61000-4-5 Surge	1 kV + / - / failure criterion A
	EN 61000-4-5 Surge	1 kV + - / PE / failure criterion A
	EN 61000-4-5 Surge	1 kV + - / PE / failure criterion A
	EN 61000-4-5 Surge	1 kV DC-OK / PE / failure criterion A
	EN 61000-4-6	0.15...80 MHz / 20 V failure criterion A
	EN 61000-4-11	0 V up to 1 cycle / failure criterion A
	EN 61000-4-11	40 % of V / 200 ms failure criterion A
	EN 61000-4-11	70 % of V / 500 ms failure criterion A
	EN 61000-4-11	0 V / 5000 ms failure criterion C
	VDE 0160	1550 V / 1.3 ms failure criterion A
	EN 55032	Class B
	EN 55032	Class B
	EN 55011	Class B
	EN 61000-3-2	
	EN 61000-3-3	
Continuous shock resistance	IEC 60068-2-27	30 g 6 ms / 20 g 11 ms
Vibration resistance	IEC 600068-2-6	2...17.8 Hz ± 1.6mm / 17.8...500 Hz 2 g

Mechanical data		
Weight	[g]	1616.05
Dimensions	[mm]	182 x 183 x 59
Materials		housing: aluminium alloy; housing cap: PC; screws: steel bronzed

Remarks	
Pack quantity	1 pcs.

Electrical connection - IO-Link

Connector: 1 x M12; coding: A; Locking: brass



1:	power supply L+
2:	n.c.
3:	power supply L-
4:	IO-Link

DN4237

Switched-mode power supply 24 V DC

PSU-3AC/24VDC-20A/IOL/IP67

Electrical connection - Output voltage

Connector: 2 x M12; coding: L; Locking: brass



1:	US
2:	GND UA
3:	GND US
4:	UA
5:	FE

Electrical connection - power supply

Connector: 1 x 7/8"; Locking: brass



1:	L1
2:	N
3:	PE
4:	L2
5:	L3

Diagrams and graphs

block diagram

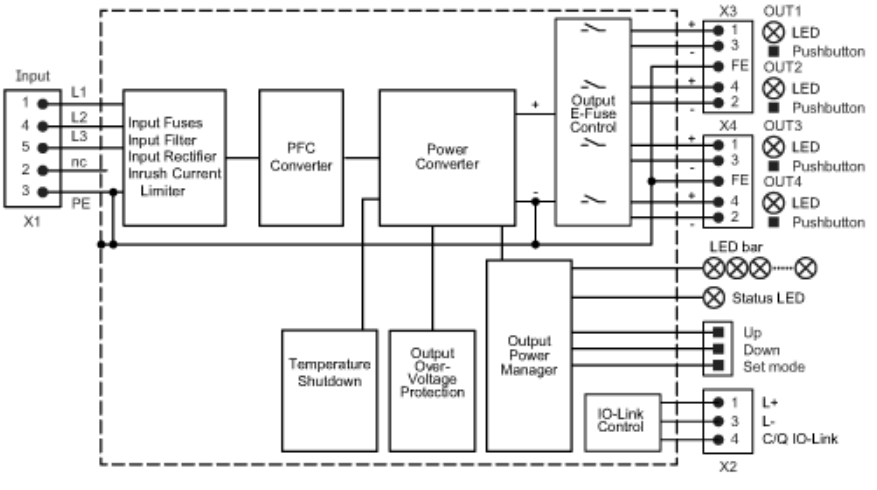

DN4237

Switched-mode power supply 24 V DC

PSU-3AC/24VDC-20A/IOL/IP67

output characteristics

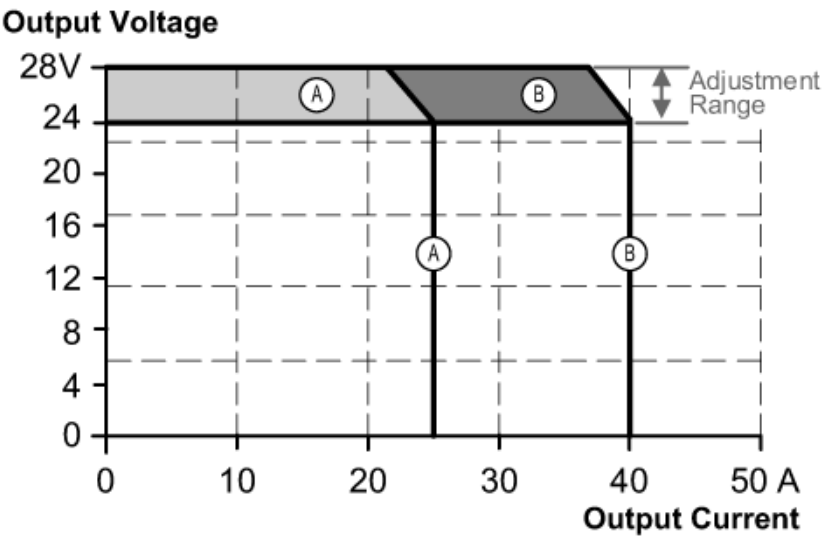

characteristic curve for degree of efficiency / power loss

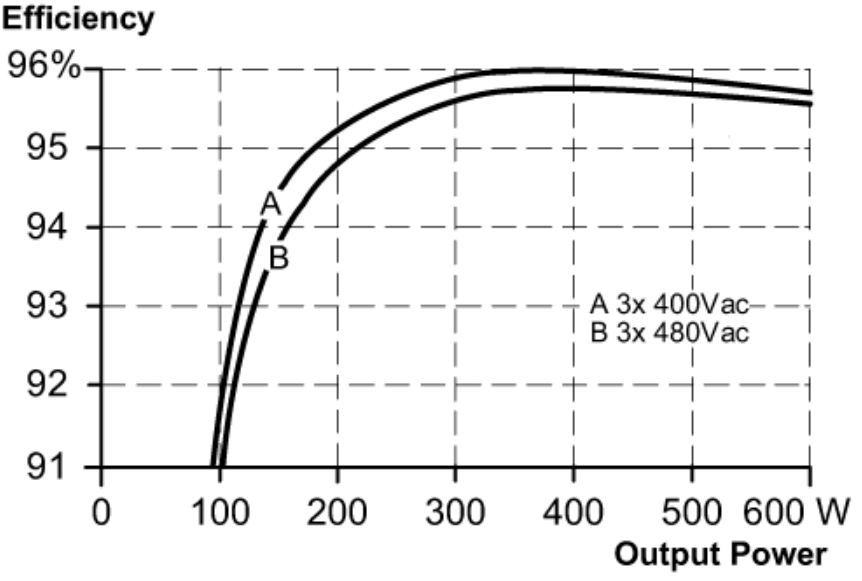

characteristic line for derating

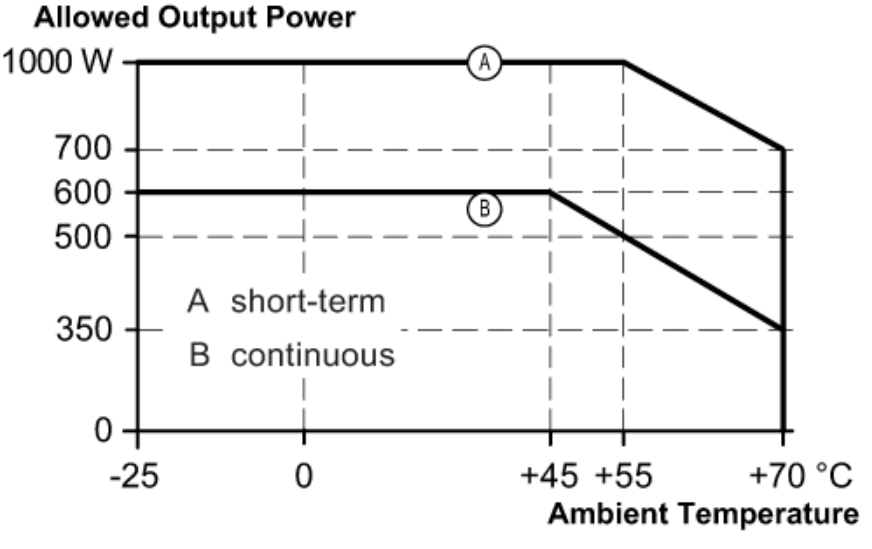

DN4237

Switched-mode power supply 24 V DC

PSU-3AC/24VDC-20A/IOL/IP67

characteristic line for mains buffering time

