PHAP5-10 series

Tact switches • 3.5 x 6 mm standard package



DISTINCTIVE FEATURES

Compact size
Positive tactile feed back
Through-hole or SMT

ENVIRONMENTAL SPECIFICATIONS

- Operating Temperature: -25 °C to +70 °C (-13 °F to +158 °F)
- Storage Temperature: -30 °C to +80 °C (-22 °F to +176 °F)



ELECTRICAL SPECIFICATIONS

- Contact rating: 50 mA 12 VDC
- Contact Resistance: 100 mΩ max.
- Insulation Resistance: 100 MΩ min. at 500 VDC
- Dielectric Strength: 250 VAC / 1 minute

MECHANICAL SPECIFICATIONS

- Operating force: 160 g ±50 g
- Mechanical life: 50,000 cycles min.
- Travel: 0.25 mm

MATERIALS

- Body: Polyamide/ Polyphthalamide
- Contact: Silver plated stainless steel
- Cover: Stainless Steel/Nickel Copper
- Terminal: Silver plated brass
- Actuator: Polyamide

The company reserves the right to change specifications without notice.

PHAP5-10 series

Tact switches • 3.5 x 6 mm standard package

PCB LAYOUT

10R THROUGH-HOLE

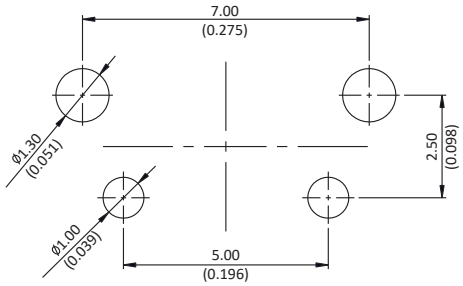

10R SURFACE MOUNT

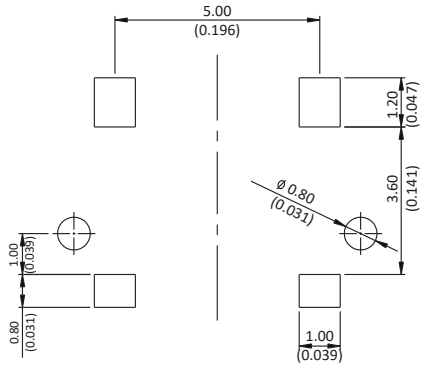

10V THROUGH-HOLE

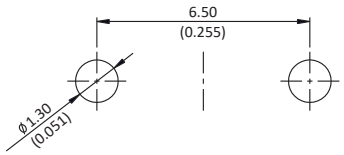

10V SURFACE MOUNT

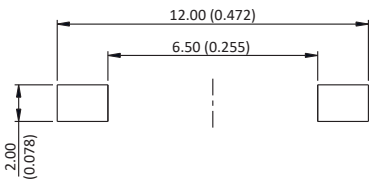

PACKAGING

	PACKAGING QUANTITY		
PART NUMBER	BAG	TUBE	TAPE AND REEL
PHAP5-10V•2A•T•••	1,000 pcs	135 pcs	-
PHAP5-10V•2B•T•••	1,000 pcs	135 pcs	-
PHAP5-10V•2A•S•••	-	-	1,800 pcs
PHAP5-10V•2B•S•••	-	-	1,600 pcs
PHAP5-10R•••T•••	500 pcs	-	-
PHAP5-10R•••S•••	-	-	900 pcs

PHAP5-10 series

Tact switches • 3.5 x 6 mm standard package

BUILD YOUR PART NUMBER

PHAP5- [ ] [ ] [ ] [ ] [ ]

SERIES

PHAP5-

PACKAGE

10	2 pin inline

STYLE

V	Vertical
R	Right angle

CONTACT M

A	Standard

HEIGHT/LENGTH (SPECIFIED DIMENSIONS)

2A	4.3 mm
2B	5 mm
2S	0.7 mm
2T	1.4 mm

See drawings for availability

PHAP5- [ ] [ ] [ ] [ ] [ ]

FORCE

2	160 g

MOUNTING

T	Through-hole
S	Surface mount

GROUNDING

2	Non ground

WASHABLE

N	No sealing

PACKAGING

2	Bags
3	Tube
4	Tape and reel

See packaging table for availability

PHAP5-10 series

Tact switches • 3.5 x 6 mm standard package

10R: 2 PIN INLINE - RIGHT ANGLE - THROUGH-HOLE



	Height H
PHAP5-10RA2S	0.70 (0.027)
PHAP5-10RA2T	1.40 (0.055)
PHAP5-10RA2B	5.00 (0.196)

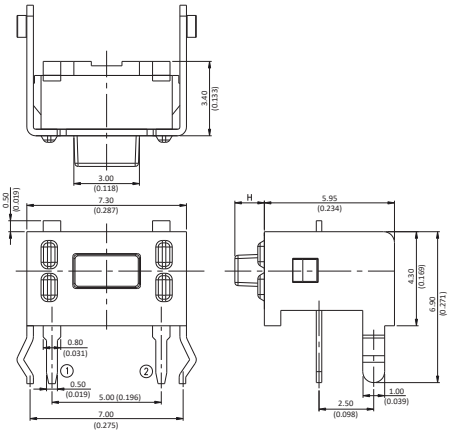

10R: 2 PIN INLINE - RIGHT ANGLE - SURFACE MOUNT



	Height H
PHAP5-10RA2S	0.70 (0.027)
PHAP5-10RA2T	1.40 (0.055)
PHAP5-10RA2B	5.00 (0.196)

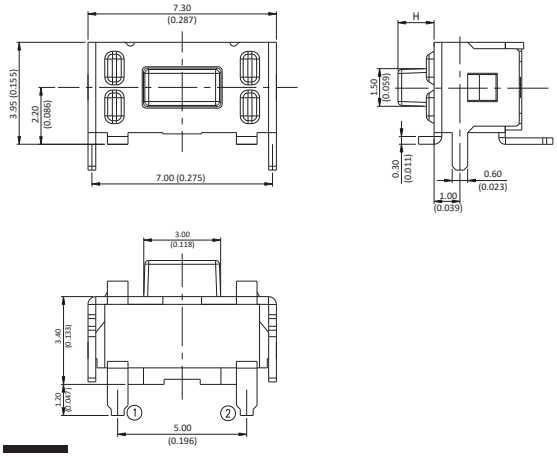

10V: 2 PIN INLINE - VERTICAL - THROUGH-HOLE



	Height H
PHAP5-10VA2A	4.3 (0.169)
PHAP5-10VA2B	5.00 (0.196)

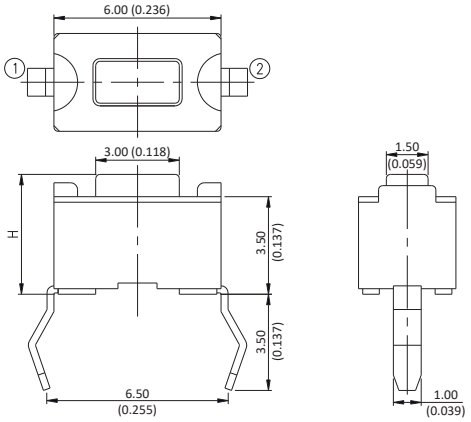

10V: 2 PIN INLINE - VERTICAL - SURFACE MOUNT



	Height H
PHAP5-10VA2A	4.3 (0.169)
PHAP5-10VA2B	5.00 (0.196)

