# TCC291

## Temperature transmitter

TCC350K1ED06-A-DKG/US

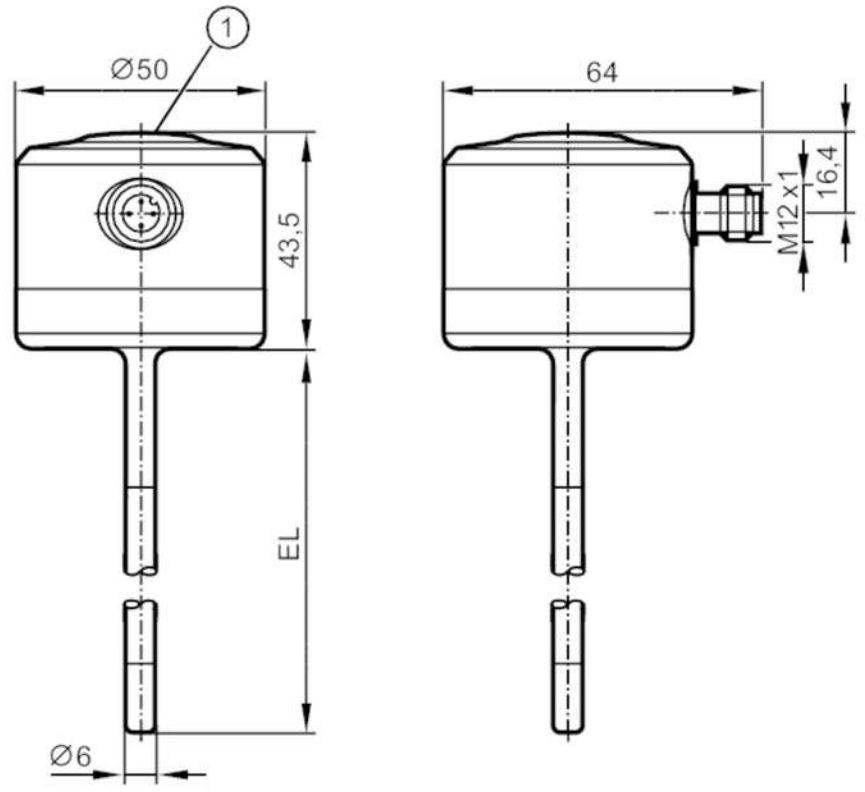


1 LED

| | | | |
|---|---|---|---|
| **Product characteristics** | | | |
| Number of inputs and outputs | | Number of digital outputs: 1; Number of analogue outputs: 1 | |
| Measuring range | | -25...160 °C | -13...320 °F |
| Communication interface | | IO-Link | |
| Process connection | | clamp adapter Ø 6 mm | |
| Installation length EL | [mm] | 350 | |
| **Application** | | | |
| Special feature | | Gold-plated contacts | |
| Measuring element | | 1 x Pt 1000 | |
| Reference element | | 1 x NTC | |
| Media | | liquids and gases | |
| Pressure rating | | 160 bar | 16 MPa |
| **Electrical data** | | | |
| Operating voltage | [V] | 18...32 DC;  ("supply class 2" to cULus) | |
| Current consumption | [mA] | 10;  (24 V) | |
| Protection class | | III | |
| Reverse polarity protection | | yes | |
| Power-on delay time | [s] | 6 | |
| Integrated watchdog | | yes | |

# TCC291

## Temperature transmitter

TCC350K1ED06-A-DKG/US

| | | | |
|---|---|---|---|
| **Inputs / outputs** | | | |
| Number of inputs and outputs | | Number of digital outputs: 1; Number of analogue outputs: 1 | |
| **Outputs** | | | |
| Total number of outputs | | 2 | |
| Output signal | | analogue signal; IO-Link; calibration check status | |
| Electrical design | | PNP/NPN | |
| Number of digital outputs | | 1 | |
| Output function | | normally closed; (diagnostic signal) | |
| Max. voltage drop switching output DC | [V] | 2 | |
| Permanent current rating of switching output DC | [mA] | 100 | |
| Diagnostic output | | calibration check status and error diagnostics | |
| Number of analogue outputs | | 1 | |
| Analogue current output | [mA] | 4...20 | |
| Max. load | [Ω] | (Ub - 15 V) x 50 | |
| Short-circuit protection | | yes | |
| Type of short-circuit protection | | pulsed | |
| Overload protection | | yes | |
| **Measuring/setting range** | | | |
| Probe length L | [mm] | 350 | |
| Measuring range | | -25...160 °C | -13...320 °F |
| Note on measuring range | | scalable | |
| Factory setting | | -10...150 °C / 14...302 °F | |
| Calibration check limit | [K] | 0.5...3 | |
| In steps of | [K] | 0.05 | |
| Resolution | | | |
| Resolution of analogue output | [K] | 0.05 | |
| **Accuracy / deviations** | | | |
| Precision analogue output | [K] | ± 0,2 | |
| Precision IO-Link | [K] | ± 0,2 | |
| Temperature coefficient analogue output | [% of the span / 10 K] | < ± 0,02; (in case of deviation from the reference condition 25 ± 5 °C) | |
| Temperature coefficient IO-Link | [% of the span / 10 K] | < ± 0,01; (in case of deviation from the reference condition 25 ± 5 °C) | |
| **Response times** | | | |
| Dynamic response T05 / T09 | [s] | 1,5 / 4 | |
| **Software / programming** | | | |
| Parameter setting options | | Display unit; scaling of the analogue output; calibration check limit; switching logic diagnostic output; simulation mode | |
| **Interfaces** | | | |
| Communication interface | | IO-Link | |

# TCC291

## Temperature transmitter

TCC350K1ED06-A-DKG/US

| | | | |
|---|---|---|---|
| Transmission type | | COM2 (38,4 kBaud) | |
| IO-Link revision | | 1.1 | |
| SDCI standard | | IEC 61131-9 CDV | |
| Profiles | | Digital Measuring Sensor, Common Profile, Blob Transfer | |
| SIO mode | | yes | |
| Required master port type | | A | |
| Process data analogue | | 1 | |
| Process data binary | | 1 | |
| Min. process cycle time | [ms] | 4.4 | |
| IO-Link resolution temperature | [K] | 0.01 | |
| Supported DeviceIDs | | **Type of operation** | **DeviceID** |
| | | default | 1129 |
| **Operating conditions** | | | |
| Ambient temperature | [°C] | -25...70 | |
| Note on ambient temperature | | max. internal device temperature: 125 °C | |
| Storage temperature | [°C] | -40...100 | |
| Protection | | IP 68; IP 69K | |
| **Tests / approvals** | | | |
| EMC | | DIN EN 61000-6-2 | |
| | | DIN EN 61000-6-3 | |
| Shock resistance | | DIN EN 68000-2-27 | 50 g (11 ms) |
| Vibration resistance | | DIN EN 60068-2-6 | 35 g (10...2000 Hz) |
| MTTF | [years] | 329 | |
| Note on approval | | factory certificate available as download at www.factory-certificate.ifm | |
| UL approval | | UL Approval no. | K021 |
| | | File number UL | E217884 |
| **Mechanical data** | | | |
| Weight | [g] | 315.6 | |
| Housing | | cylindrical | |
| Dimensions | [mm] | Ø 50 / L = 393.5 | |
| Materials | | stainless steel (316L/1.4404); PEI; FKM; PFA | |
| Materials (wetted parts) | | stainless steel (316L/1.4404); PEEK | |
| Process connection | | clamp adapter Ø 6 mm | |
| Surface characteristics Ra/Rz of the wetted parts | | Ra: < 0.8 | |
| Probe diameter | [mm] | 6 | |
| Installation length EL | [mm] | 350 | |
| **Remarks** | | | |
| Remarks | | MS = set measuring span | |
| | | operating voltage "supply class 2" according to cULus | |
| Pack quantity | | 1 pcs. | |

# TCC291

## Temperature transmitter

TCC350K1ED06-A-DKG/US

## Electrical connection

Connector: 1 x M12; coding: A; Contacts: gold-plated

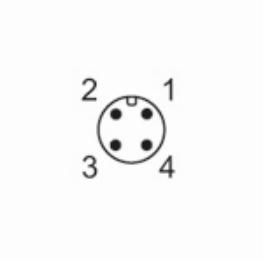


### Connection

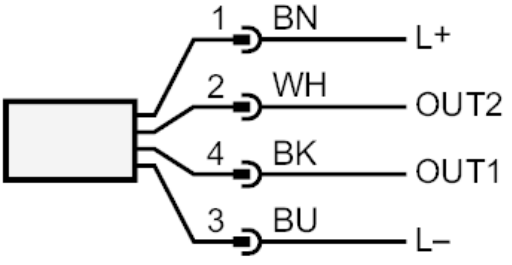


| | |
|---|---|
| OUT2: | analogue output |
| OUT1: | Diagnostic output / IO-Link |