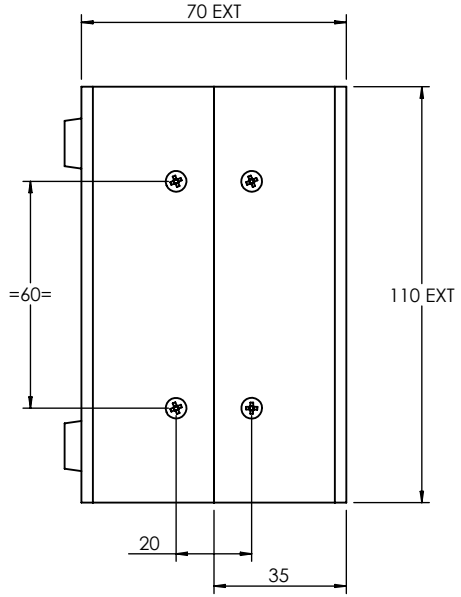

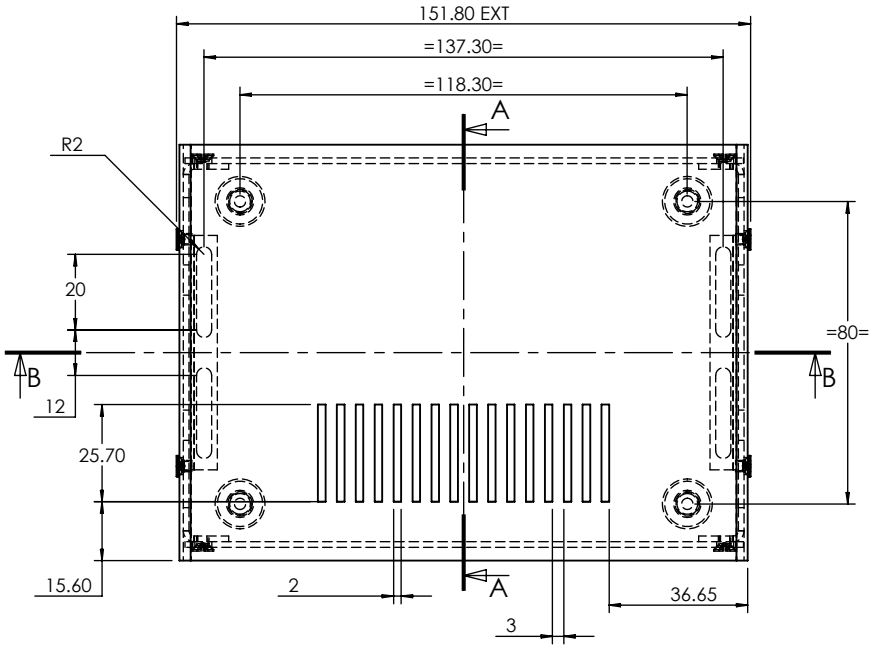

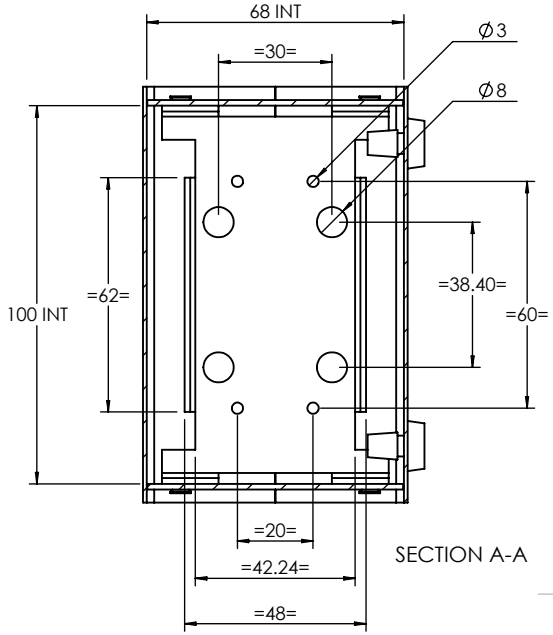

SECTION A-A

ISO VIEW
1 : 3

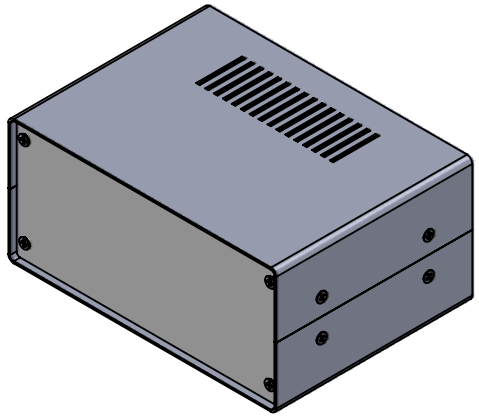

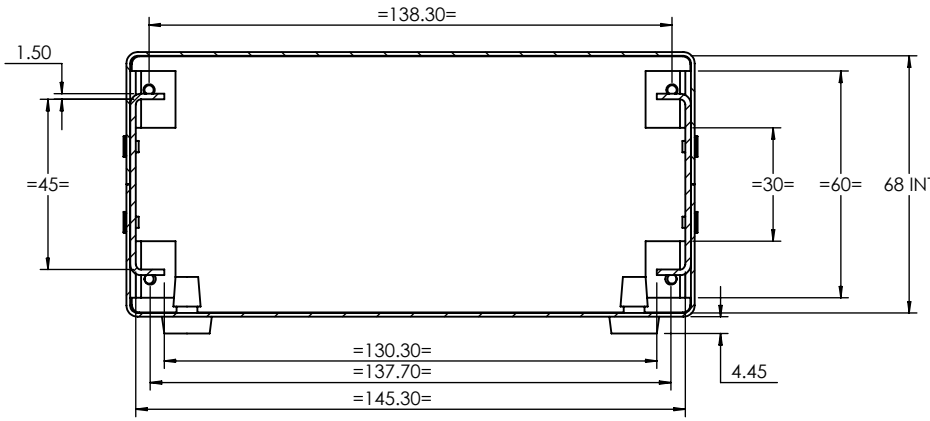

SECTION B-B

CAMDENBOSS ELECTRONICS & ENCLOSURES JAMES CARTER RD, MILDENHALL, SUFFOLK. IP28 7DE TEL: 01638 716101 FAX: 01638 716554 EMAIL: Sales@CamdenBoss.com WEB: www.CamdenBoss.com		UNLESS OTHERWISE SPECIFIED: DIMENSIONS ARE IN MILLIMETERS	DO NOT SCALE DRAWING
		GENERAL TOLERANCES +/- 0.2	REVISION. O
		FINISH. VAR	TITLE: DIMENSION DRAWING FOR METAL CONSOL BOX SIZE 1
	NAME / SIGNED / DATE	MATERIAL. VAR	DWG NO. CMCB00001
DRAWN	IAN PAGANO / I.P / 06/03/14		A4
CHK'D	- / - / -	PROJECTION.	SCALE. 1:3
			SHEET 1 OF 1