MINIFLEX®

***	Torsional flexibility	***	Radial flexibility	Push fit	Axial flexibility	**	Conical flexibility



DESCRIPTION

- Flexible element
  - ❶ Natural rubber block bonded to;
  - ❷ V-shaped metal armatures.

- Flange : aluminium or cast-iron :
  - ❸ DRIVE-SEGMENT

OPERATION

The MINIFLEX coupling is designed with the following features :

- push fit assembly;
- compact, smooth cylindrical shape without protrusions;
- the flexible element is precompressed during assembly, which extends the range of operating conditions where the rubber is not subject to tension.

Advantages
- Highly effective attenuation of cyclic irregularities and peaks in the torque.
- Exceptionally long-life ensured by precompressing the flexible element.
- Tolerance to large misalignment: avoids the need for precise alignment of the machines to be coupled.

Recommendation
- It is recommended that the coupling should not be subjected to axial tension which might cause the flexible element to slip from the drive segment on the flange.

DIMENSIONS

Section YY'

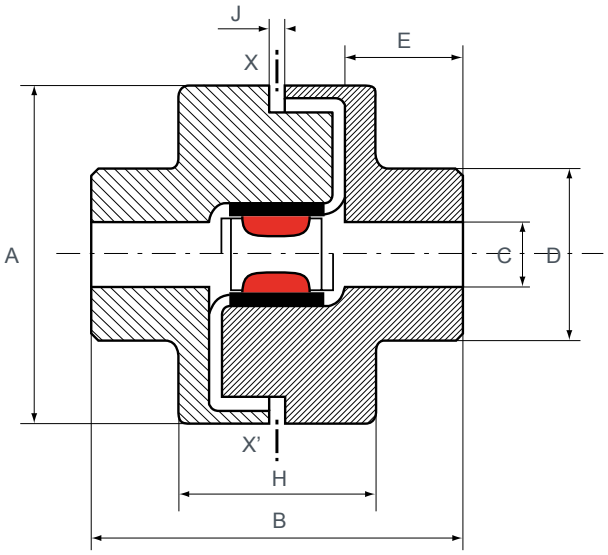

Section XX'

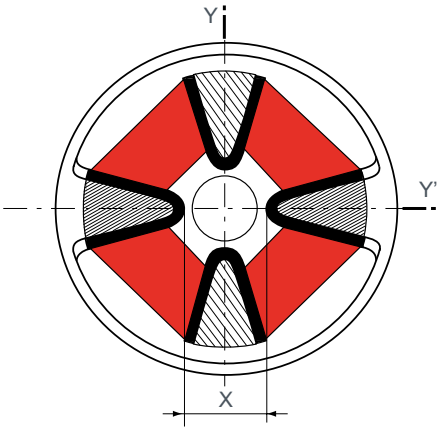

Flanges supplied unbored

	Ref.	Nominal torque (N.m)	Max torque (N.m)	Max speed (rpm)	Max hole C (mm)	A (mm)	B (mm)	D (mm)	E (mm)	H (mm)	J (mm)	X (mm)	Weight (kg)
ALUMINIUM FLANGES	**633040**	2,5	5	10 000	14	45	41	28	14	21	2	14	0,10
	633010	10	20	9 000	19	58	61	36	20	31	2	16	0,26
	633020	20	40	7 000	28	80	88	48	30	40	4	28	0,68
CAST IRON FLANGES	**633041**	2,5	5	10 000	14	45	41	28	14	21	2	14	0,25
	633039	10	20	9 000	28	58	61	42	20	31	2	16	0,6
	633038	20	40	7 000	42	84	88	63	30	40	4	28	1,8
	633044	40	80	4 000	55	118	116	82	40	51	6	38	4,5
	633047	60	120	4 000	55	118	120	82	40	55	10	38	4,5

1 N.m ≈ 0,1 mkg

Please see current price list for availability of items.

The maximum torque is considered to be infrequent, start-up torque and not periodic.

PARTS LIST

Coupling Reference	Flexible element		Flange	
	Reference	Qty	Reference	Qty
633010	**633510**	1	321521	2
633020	**633520**	1	321531	2
633038	**633520**	1	321534	2
633039	**633510**	1	321503	2

Coupling Reference	Flexible element		Flange	
	Reference	Qty	Reference	Qty
633040	**633501**	1	321511	2
633041	**633501**	1	321501	2
633044	**633540**	1	321535	2
633047	**633640**	1	321535	2

OPERATING LIMITS

POWER RANGE

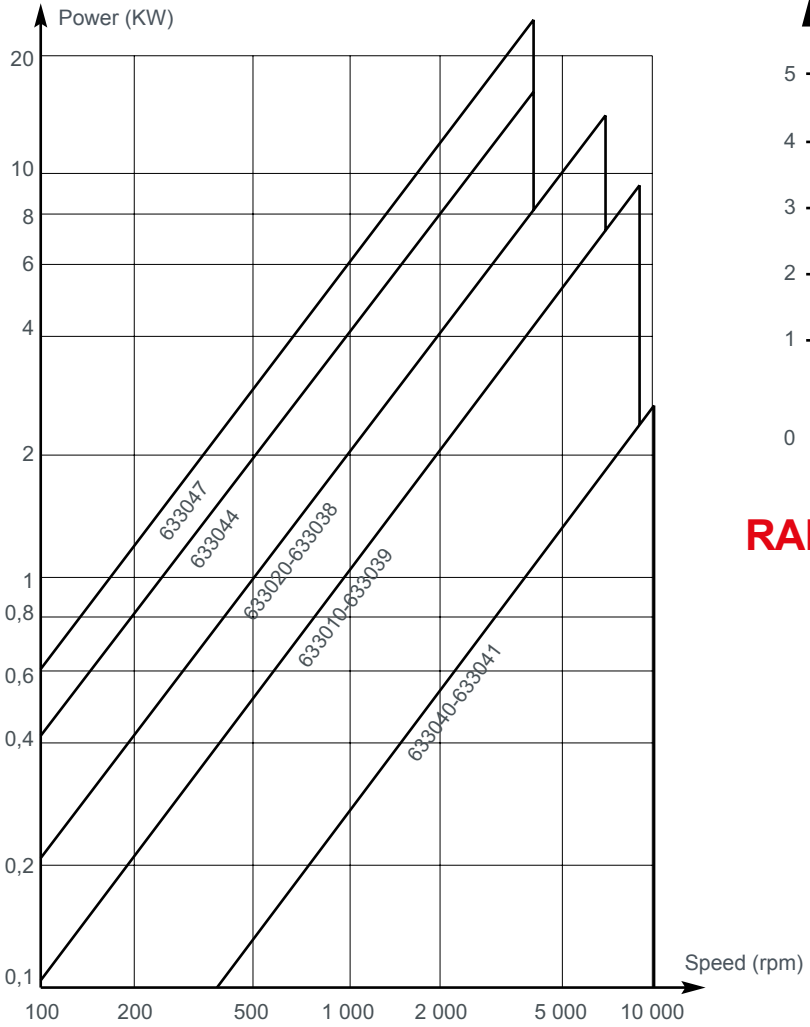

CONICAL MISALIGNMENT

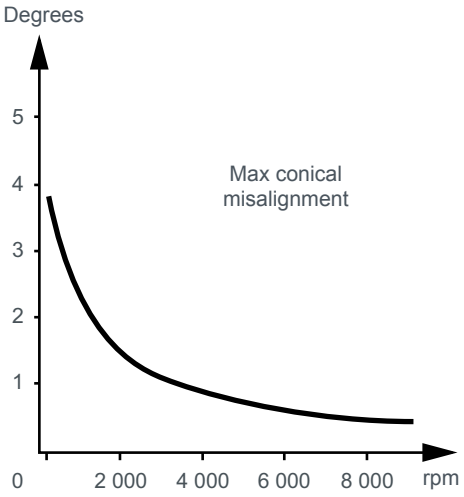

RADIAL MISALIGNMENT

Nominal torque N.m	Radial misalignment at 1 500 tr/mn
2,5	0,15 mm
10	0,25 mm
20	0,50 mm
40	1,00 mm
60	1,00 mm

OPERATING CHARACTERISTICS

Nominal torque N.m	Vibrat. coupling (N.m)	Torsion under NT (degrees)	Stiffness			
			Axia (Dan/Mm)	Radial (Dan/Mm)	Torsional (Dan/Mm)	Conical (Dan/Mm)
2,5	1,2	28	0,30	2	0,004	0,005
10	5	28	1,50	5	0,020	0,090
20	10	24	1,25	7	0,045	0,090
40	20	18	2,0	8	0,126	0,022
60	30	16	4,5	12	0,214	0,034

1 N.m ≈ 0,1 mkg

Please see current price list for availability of items.

ASSEMBLY

The coupling is assembled and disassembled axially which entails moving one of the machines. This procedure is not difficult and can be done quickly, as at least one of the machines being coupled is not heavy.

Method :

- fit an opposing pair of armatures of the flexible element half-way onto the drive segments of one flange;
- position the second flange;
- push the two flanges together to engage the armatures of the flexible element;
- release.

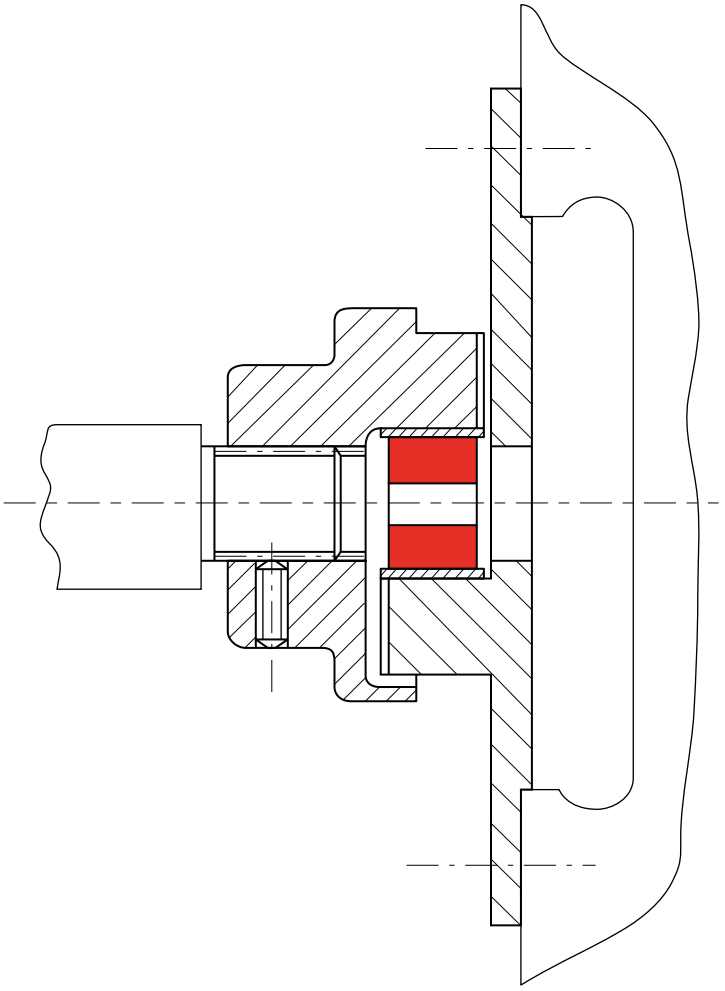

Example : electric motor/pump coupling mounted on fly wheel and grooved shaft.