E21092

Hexagon nut

NUT M18 ST.STEEL 100PCS.

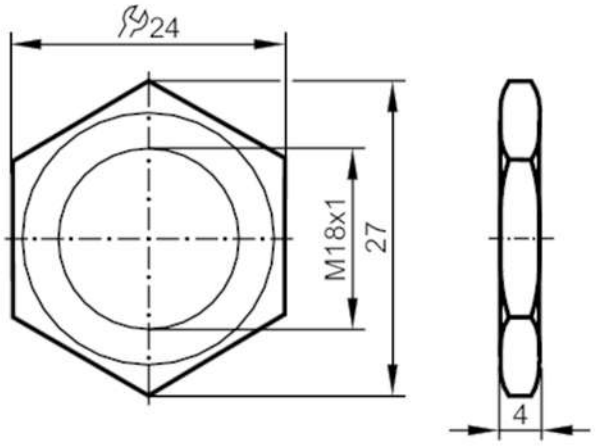

Mechanical data		
Weight	[g]	767.5
Dimensions	[mm]	M18 x 1
Thread designation		M18 x 1
Materials		stainless steel (1.4571/316Ti)
Remarks		
Pack quantity		100 pcs.