VERSARACK™



FEATURES

- Designed to accommodate all standard 19-inch rack equipment
- Easy, single-tool assembly reduces installation time and cost
- Spring-load pivot pins provide for either left or right hinging; pins can be arranged in unlocked or locked position
- Preassembled for fast, time-saving installation
- Temporary mounting bracket allows for rapid, single-person wall installation
- UL double lug ground holes provide easy adherence to local bonding and grounding codes
- Cable tie down points, sized for up to 1-inch Velcro® straps, provided in horizontal and vertical positions in multiple locations
- Standard 12- or 24-inch deep offering to accommodate various applications
- Open design provides for maximum access to cables and equipment
- 19-inch rack fasteners (Phillips head, pilot point, black) 12-24, quantity 20, included with rack
- Smart packaging with hand-carrying holes allows for easy transportation

INDUSTRY STANDARDS

UL 1863 Listed; File Number E230874
Rated to 100 lbs. with a 4X safety factor

EIA 310-D

APPLICATION

VERSARACK™ is used for wall mounting and securing 19-inch rack equipment for Telecommunication Rooms and other locations. The rack provides for either left or right hinging to accommodate a variety of applications. These open frame racks are ideal for high-density cabling application. VERSARACK is ideal for IDFs (Intermediate Distribution Frames), remote 19-inch rack equipment, building automation, security and many other applications.

SPECIFICATIONS

- Wall section made of heavy gauge, cold rolled steel construction
- Welded pivoting rack section constructed of steel
- Tapped 12-24 holes per EIA Universal pattern standards (1/4-5/8-5/8-1/4)

FINISH

- Pretreated steel coated with RAL 9005 black textured, low-gloss polyester powder paint
- Hardware is clear or plated black
- Rack 12-24 fasteners plated black

LOAD RATING

Static working load rating is 150 lbs. for all sizes

ACCESSORIES

Vertical Cable Managers
D-Ring Cable Manager
Blanking Panels
Grounding kits
PDUs
Shelves

BULLETIN: DOFRW

Standard Product

Catalog Number	AxBxC in./mm	F in./mm	G in./mm	Rack Units	Vertical Cable Manager Accessory
E19SWM12U12	27.80 x 20.91 x 12.28 706 x 531 x 312	9.24 235	22.30 566	12	E19C12U
E19SWM12U24	27.80 x 20.91 x 24.29 706 x 531 x 617	21.24 540	22.30 22.30	12	E19C12U
E19SWM20U12	41.81 x 20.91 x 12.28 1062 x 531 x 312	9.24 235	36.31 922	20	E19C20U
E19SWM20U24	41.81 x 20.91 x 24.29 1062 x 531 x 617	21.24 540	36.31 922	20	E19C20U
E19SWM25U12	50.59 x 20.91 x 12.28 1285 x 531 x 312	9.24 235	45.09 1145	25	E19C25U
E19SWM25U24	50.59 x 20.91 x 24.29 1285 x 531 x 617	21.24 540	45.09 1145	25	E19C25U

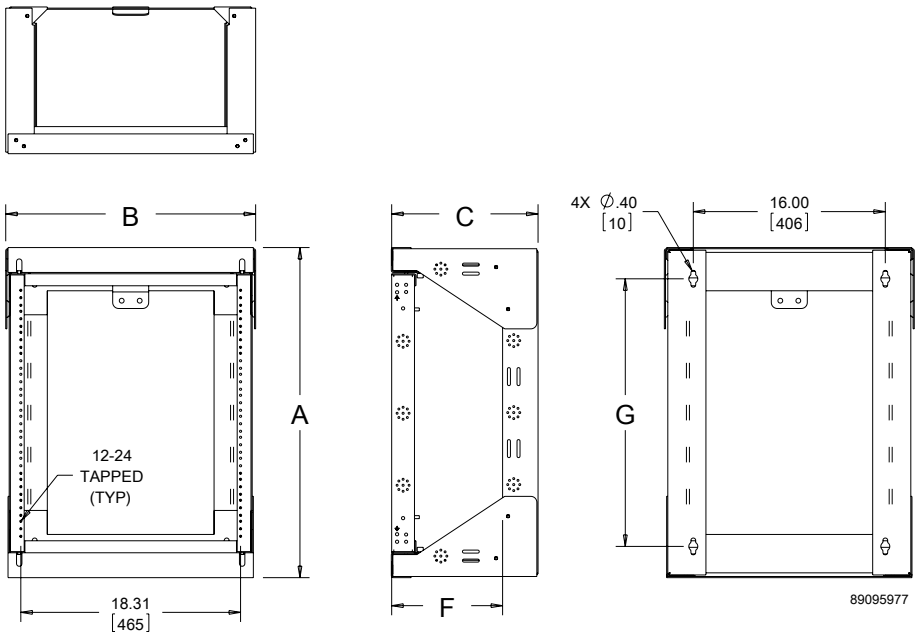

VERSARACK™ VERTICAL CABLE MANAGER



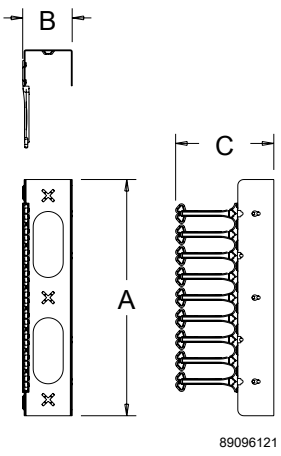

VERSARACK™ offers a complimentary vertical cable manager that easily attaches to the right or left side of Swing-Out Rack. Each accessory includes one fully-assembled manager with retaining hardware and installation instructions. One or two can be attached to fit the application. The manager is made of formed steel with composite support fingers. The vertical cable managers provides for easy and convenient cable management for high-density applications.

BULLETIN: DOFRW

Standard Product

Catalog Number	AxBxC in./mm	Use With
E19C12U	19.68 x 4.13 x 8.19 500 x 105 x 208	E19SWM12U12 or E19SWM12U24
E19C20U	28.66 x 4.13 x 8.19 728 x 105 x 208	E19SWM20U12 or E19SWM20U24
E19C25U	40.51 x 4.13 x 8.19 1029 x 105 x 208	E19SWM25U12 or E19SWM25U24