TELTONIKA | Networks

TSW202

Ensured by PROFINET



Copyright © 2024, TELTONIKA NETWORKS. Specifications and information given in this document are subject to change by TELTONIKA NETWORKS without prior notice.

HARDWARE

FRONT VIEW

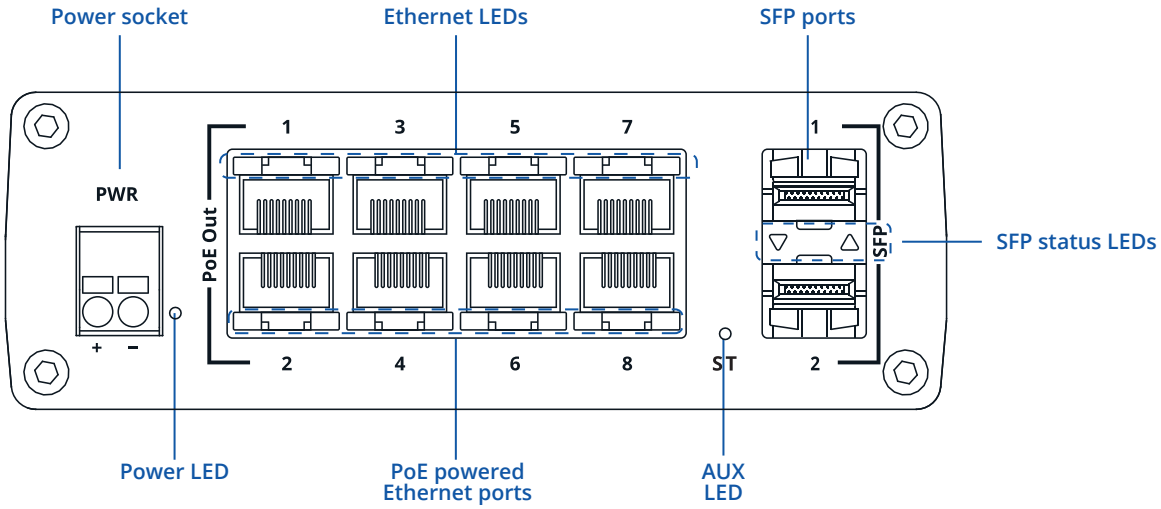

BACK VIEW

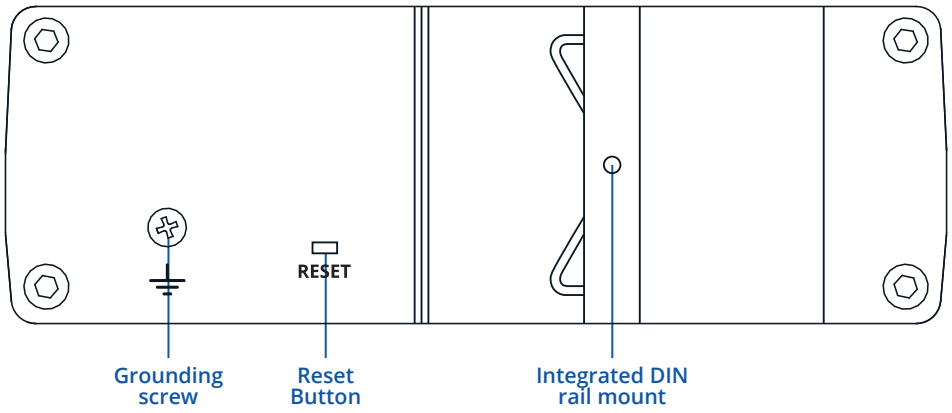

RJ45 LED MEANING

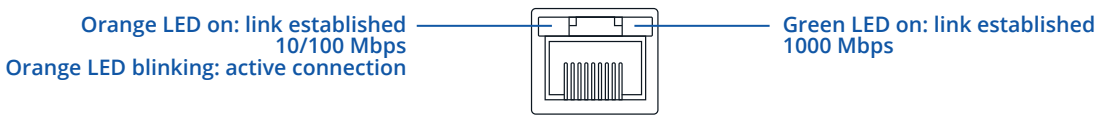

POWER SOCKET PINOUT

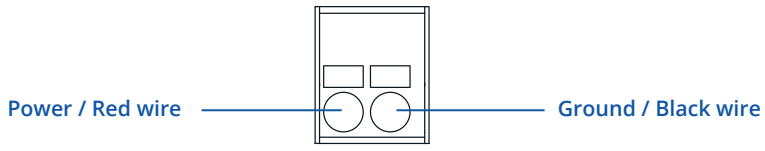

SFP LED MEANING

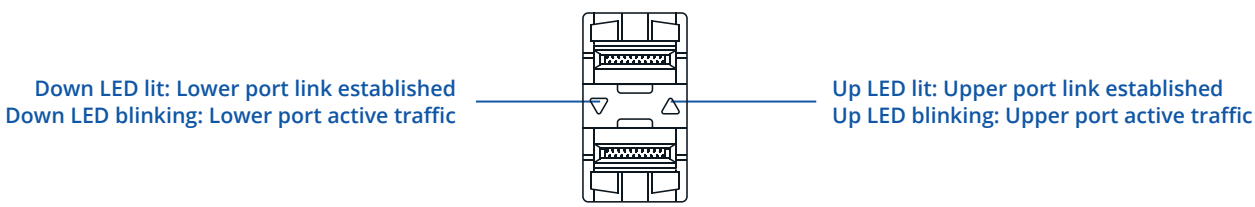

Copyright © 2024, TELTONIKA NETWORKS. Specifications and information given in this document are subject to change by TELTONIKA NETWORKS without prior notice.

FEATURES

ETHERNET

ETH	Multi-layer managed 8 x ETH ports, 10/100/1000 Mbps supports auto MDI/MDIX crossover
Fibre	2 x SFP ports
IEEE 802.3 series standards	802.3i, 802.3u, 802.3ab, 802.3x

POE OUT

PoE ports	Port 1 - 8
PoE standards	802.3af and 802.3at Alternative B
PoE Max Power per Port (at PSE)	30 W
Total PoE Power Budget (at PSE)	240 W
Maximum Ethernet cable length	100 m

SERVICES

EtherNet/IP	Yes
Profinet (class B)	Yes
SNMP V2, V3	Yes
LLDP	Yes

NETWORK

MRP	MRP client role, MRP manager role
L2 features	Loop protection, Forwarding table, VLAN, STP/RSTP
DHCP	DHCP server, DHCP client
Port Settings	Enable/disable, link speed control, port isolation, PoE Management, EEE (802.3az) management, Port Mirroring
L3 Features	Static IPv4 routing, static IPv6 routing, DHCPv6 client, static IPv6 address

QOS

QOS	Port priority, DSCP priority, 802.1p priority, TOS
Scheduling method	SP/WFQ/WRR
Bandwidth control	Rate limiting, storm control
Traffic Shaper	Port-based shaping

DIAGNOSTICS

Tools	Cable diagnostic, ping, traceroute, nslookup

SYSTEM CHARACTERISTICS

RAM	128MB, DDR3
FLASH storage	16 MB serial flash

FIRMWARE / CONFIGURATION

WEB UI	Update FW from file, check FW on server, configuration profiles, configuration backup
FOTA	Update FW
RMS	Update FW, configuration for multiple devices at once
Keep settings	Update FW without losing current configuration

FIRMWARE CUSTOMISATION

Operating system	TSWOS (OpenWrt based Linux OS)
Supported languages	Busybox shell, Lua, C, C++
Development tools	SDK package with build environment provided

Copyright © 2024, TELTONIKA NETWORKS. Specifications and information given in this document are subject to change by TELTONIKA NETWORKS without prior notice.

PERFORMANCE SPECIFICATIONS

Bandwidth (Non-blocking)	20 Gbps
Forwarding rate	14.88 Mpps
Packet buffer	512 KB
MAC address table size	8K entries
Jumbo frame support	10000 bytes

POWER

Connector	2-pin industrial DC power socket
Input voltage range	7 - 57 VDC
Input voltage range for PoE	44 - 57 VDC
Power consumption	Idle: < 3 W / Max: 8 W / PoE Max: 248 W

PHYSICAL INTERFACES

Ethernet	8 x RJ45 ports, 10/100/1000 Mbps
Fibre	2 x SFP ports
Status LEDs	1 x Power LED, 1 x Aux LED, 16 x LAN status LEDs, 2 x SFP status LEDs
Power	1 x 2-pin industrial DC power socket
Reset	Software reset button
Grounding	Screw terminal

PHYSICAL SPECIFICATION

Casing material	Anodized aluminum housing and panels
Dimensions (W x H x D)	132 x 44.2 x 122.2 mm
Weight	610 g
Mounting options	Integrated DIN rail bracket, wall mounting (additional kit needed), flat surface placement

OPERATING ENVIRONMENT

Operating temperature	-40 °C to 75 °C
Operating humidity	10 % to 90 % non-condensing
Ingress Protection Rating	IP30

REGULATORY & TYPE APPROVALS

Regulatory	CE, UKCA, RCM, ANRT, FCC, IC, CB, RoHS, REACH

EMC EMISSIONS & IMMUNITY

Standards	EN 55032:2015 + A11:2020 + A1:2020 EN 55035:2017 + A11:2020 EN IEC 61000-3-2: 2019 + A1:2021 EN 61000-3-3: 2013 + A1:2019 + A2:2021
ESD	EN 61000-4-2:2009
Radiated Immunity	EN IEC 61000-4-3:2020
EFT	EN 61000-4-4:2012
Surge Immunity (AC Mains Power Port)	EN 61000-4-5:2014 + A1:2017
CS	EN 61000-4-6:2014
DIP	EN 61000-4-11:2020

SAFETY

Standards	**CE:** EN IEC 62368-1:2020 + A11:2020 **RCM:** AS/NZS 62368.1:2022 **CB:** IEC 62368-1:2018

Copyright © 2024, TELTONIKA NETWORKS. Specifications and information given in this document are subject to change by TELTONIKA NETWORKS without prior notice.

STANDARD PACKAGE*

- TSW202
- QSG (Quick Start Guide)
- Packaging box



TSW202



QSG

* Standard package contents may differ based on standard order codes.

CLASSIFICATION CODES

HS Code: 851762
HTS: 8517.62.00

For more information on all available packaging options – please contact us directly.

AVAILABLE VERSIONS

HARDWARE VERSION	SUPPORTED FREQUENCIES	STANDARD ORDER CODE / PACKAGE CONTAINS
TSW202 ******	N/A	TSW202000000 / Standard package

Copyright © 2024, TELTONIKA NETWORKS. Specifications and information given in this document are subject to change by TELTONIKA NETWORKS without prior notice.

TSW202 SPATIAL MEASUREMENTS

MAIN MEASUREMENTS

W x H x D dimensions for TSW202:

Device housing*:	132 x 44.2 x 122.2 mm
Box:	125 x 136x 47 mm

*Housing measurements are presented without screws; for measurements of other device elements look to the sections below.

TOP VIEW

The figure below depicts the measurements of TSW202 and its components as seen from the top:

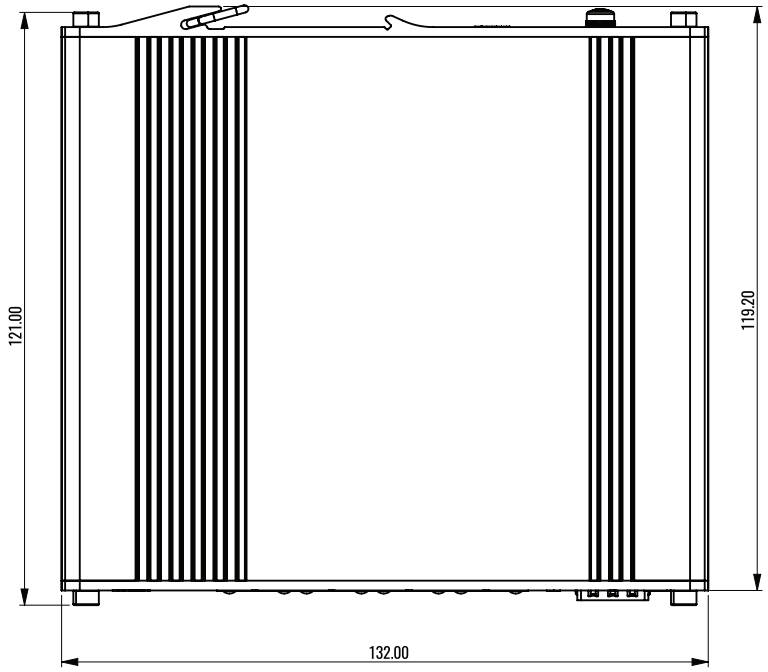

RIGHT VIEW

The figure below depicts the measurements of TSW202 and its components as seen from the right side:

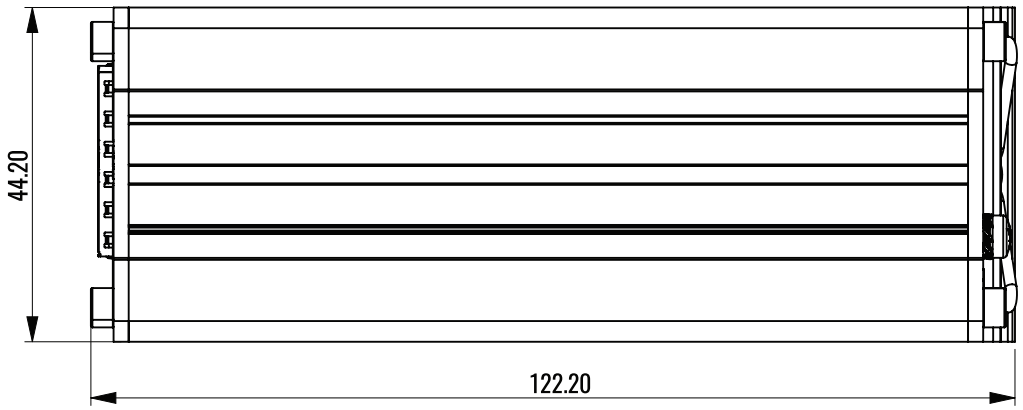

Copyright © 2024, TELTONIKA NETWORKS. Specifications and information given in this document are subject to change by TELTONIKA NETWORKS without prior notice.

FRONT VIEW

The figure below depicts the measurements of TSW202 and its components as seen from the front panel side:

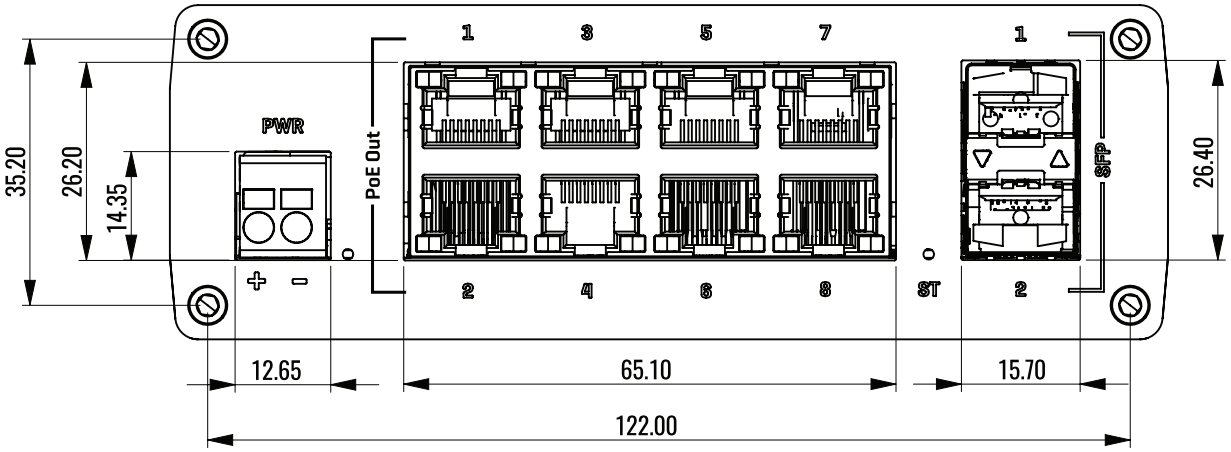

REAR VIEW

The figure below depicts the measurements of TSW202 and its components as seen from the back panel side:

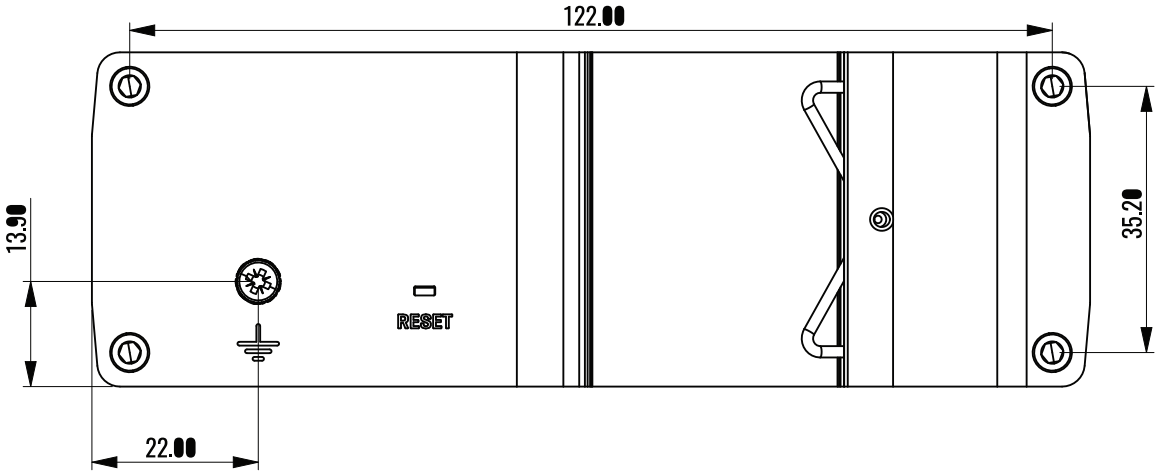

Copyright © 2024, TELTONIKA NETWORKS. Specifications and information given in this document are subject to change by TELTONIKA NETWORKS without prior notice.

MOUNTING SPACE REQUIREMENTS

The figure below depicts an approximation of the device's dimensions when cables are attached:

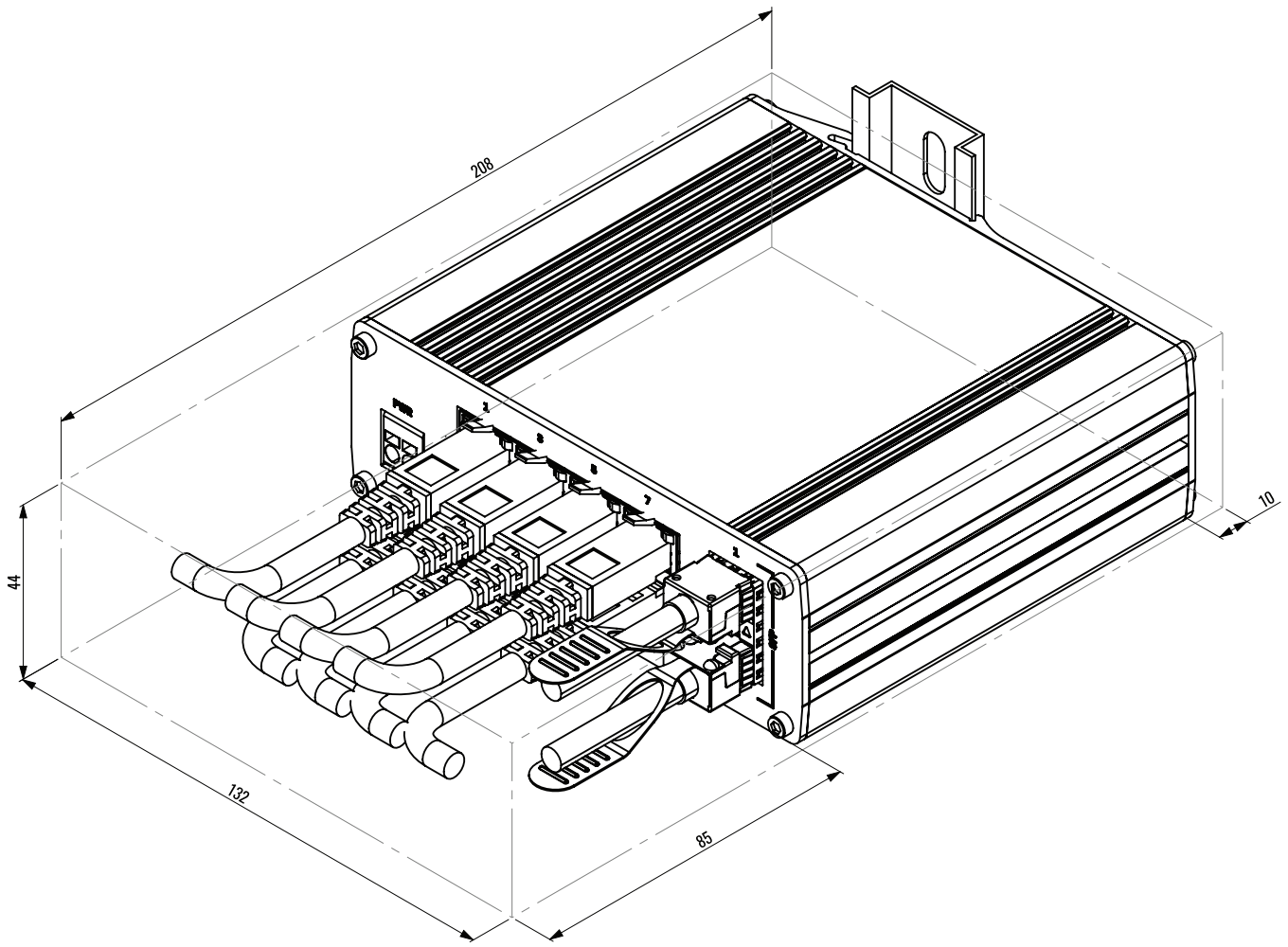

Copyright © 2024, TELTONIKA NETWORKS. Specifications and information given in this document are subject to change by TELTONIKA NETWORKS without prior notice.