Keysight Technologies
Probing Solutions for Logic Analyzers

Data Sheet

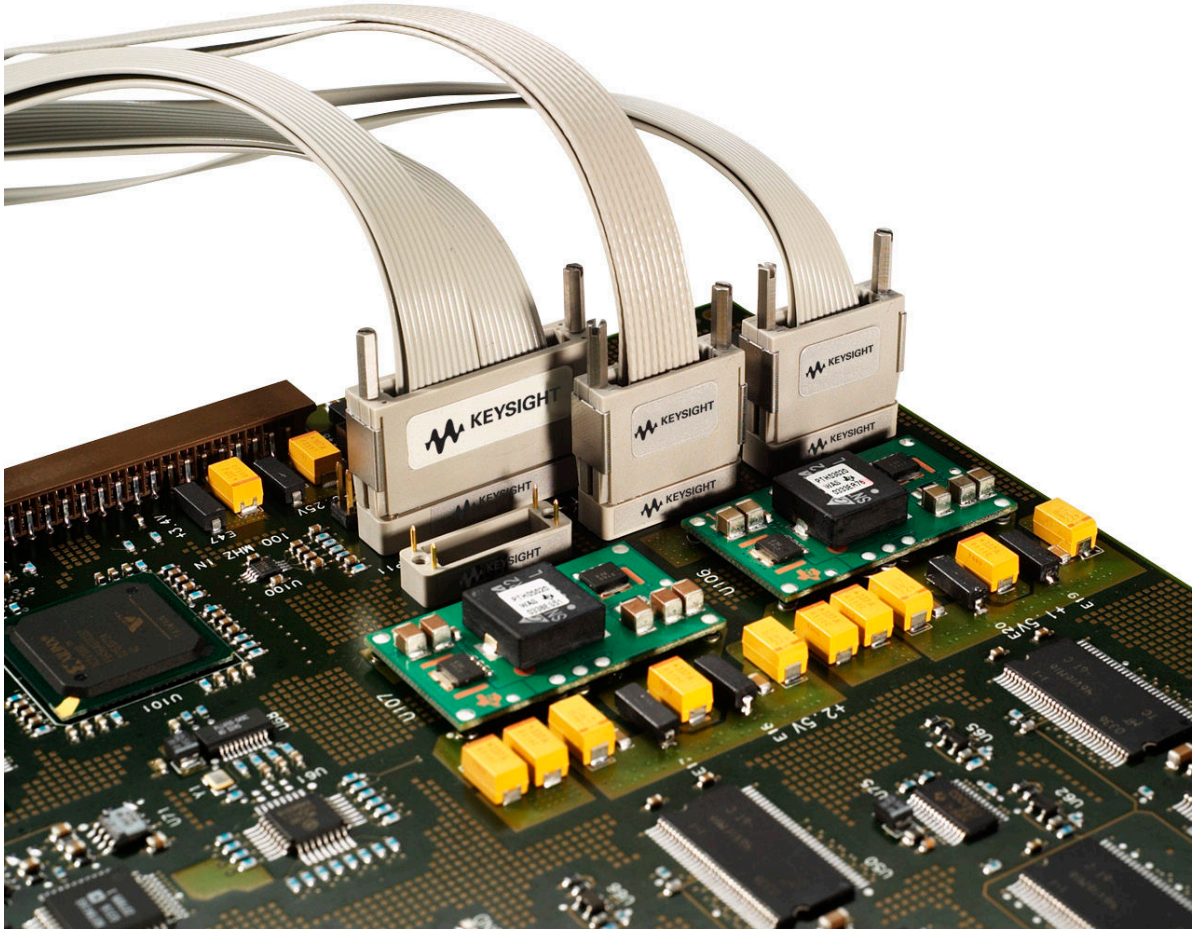

Bring the full power of your Keysight Technologies, Inc. logic analyzer to your project with high quality probing solutions

- Wide range of solutions to meet your measurement needs
- Soft Touch Connectorless probing
- High-density, high-performance probing solutions
- General-purpose probing

KEYSIGHT TECHNOLOGIES

Table of Contents

Probing for Memory System Validation 03
Reliable Connections Ensure Accuracy 04
Which Logic Analyzer? 04
Probe Selection Guide for All Keysight Logic Analyzers 05
Selecting the Optimum Probing Strategy 09
Probing Solutions for 90-pin Logic Analyzers General-Purpose Probing 11
Probing Solutions for 90-pin Logic Analyzers Soft Touch Connectorless Probing 17
Probing Solutions for 90-pin Logic Analyzers Mictor and Samtec Probing 34
Probing Solutions for 90-pin Logic Analyzers High-Speed Timing Probing 37
U4200A Series Probe/Cable Solutions for 160-pin Front Panel Connector Logic Analyzers 38
U4206A Probe, 34 Channel, Soft Touch Pro, Single-Ended, to Four 160-pin Direct Connect to Logic Analyzer Front Panel Connectors 40
U4207A Probe, Zero Ω, 34 Channel, Soft Touch Pro, Single-Ended, to Four 160-pin Direct Connect to Logic Analyzer Front Panel Connectors 43
U4200 Series Direct Connect Cables for use with 16850 Series Portable Logic Analyzers 43
General-Purpose Probing Flying Lead Probing Accessories 44
40-pin and 90-pin Logic Analyzers Probe Cables 45
Probing Solutions for 40-pin Logic Analyzers General-Purpose Probing 47
Probing Solutions for 40-pin Logic Analyzers Designing for Logic Analysis Probing 50
Probing Solutions for 40-pin Logic Analyzers Soft Touch Connectorless Probing 51
Probing Solutions for 40-pin Logic Analyzers Mictor and Samtec Probing 62
Probing Solutions for 40-pin Logic Analyzers Custom Probing 70
Related Information 75
Evolving Since 1939 77

Probing for Memory System Validation

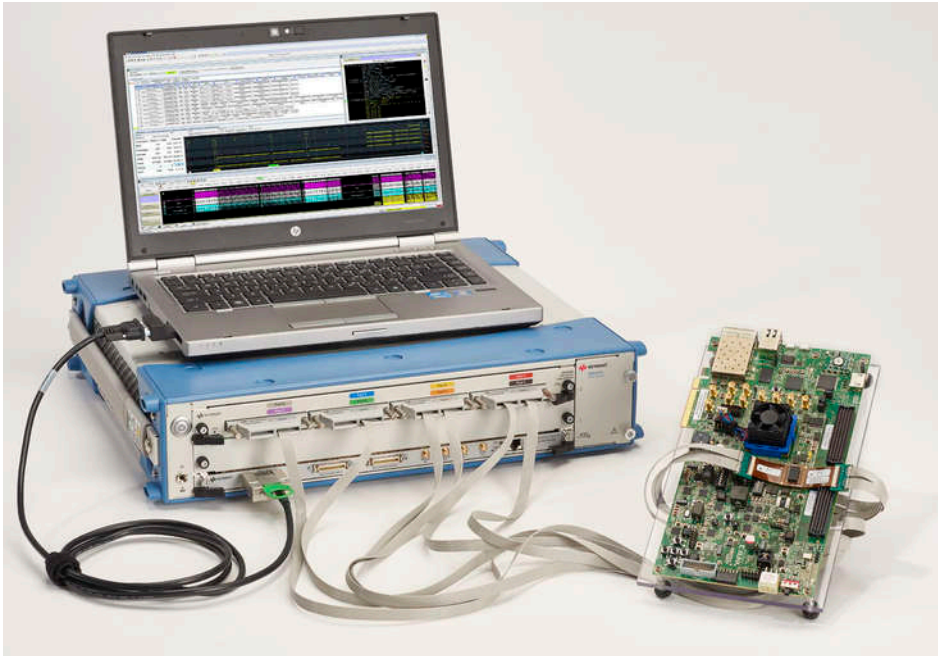

Keysight Technologies, Inc. has the measurement tools you need to validate the very latest memory technologies. These include logic analyzers, oscilloscopes and software for automated compliance, decode, and protocol checking. To complement our high speed digital instruments and software, Keysight offers probing solutions with a comprehensive range of Ball Grid Array (BGA) interposers. When positioned between the processor memory controller and the memory device, the interposers allow you to make signal quality or protocol measurements with minimal effect on the system-under-test. You can choose from a large selection of existing BGA interposers or work with Keysight's Application Engineers to define customized probing solutions for your specific needs.

Refer to the following publications for information on available DDR/LPDDR BGA interposers.

Memory type	Model number coverage	Publication title	Publication number
DDR2	W2631B, W2632A, W2633B, W2634A, E5826A, E5827A, E5384A	W2630 Series DDR2 BGA probes for logic analyzers and oscilloscopes	5989-5964EN
DDR3	W3631A, W3633A, W3636A, E5845A, E5847A	W3630A Series DDR3 BGA probes for logic analyzers and oscilloscopes	5990-3179EN
DDR4	W4631A, W4633A, W4636A, E5847A, E5849A W4641A, W4643A, U4208A, U4209A	W4640A and W4630A Series DDR4 BGA interposers for logic analyzers	5991-4258EN
LPDDR2/3/4	Custom probes through the AEO	Digital BGA interposer catalog	5992-0379ENA1

Reliable Connections Ensure Accuracy

Signal frequency content drives probing solutions

Faster clock rates demand tighter timing tolerances, such as setup and hold specifications. Systems with faster clock rates usually have shorter rise and fall times. Signals with shorter transition times have more high frequency content and are more susceptible to high frequency analog problems such as cross talk, reflections, ground bounce, noise and emissions. Susceptibility of a system to analog problems relates to the transition times of the signals, not the clock rate. A system with slow transition times cannot have high clock rates. However, it is possible for a system with slower clock rates to have signals with very fast transition times.

General-purpose probing solutions provide the analog bandwidth required to run each logic analyzer module at its maximum clock rate. The high input impedance of these probes, especially at high frequencies, presents a minimal load to most systems. Systems that are operating with little margin should be designed with consideration for both the system components and the input impedance of the probing solution being used during debug. Input impedance specifications or equivalent load diagrams can be found for each of the probing solutions described in this document.

Which Logic Analyzer?

For logic analyzers with 160-pin front panel connector, use probes identified in this document as “Direct-connect probes.”

For logic analyzers with cables that use a 3M-style connector with two rows of 20 pins on 0.1-inch centers, as illustrated in Figure 1.1, use probes identified in this document as “for analyzers with 40-pin pod connectors.”

For logic analyzers with cables that use a 90-pin, high-density connector as illustrated in Figure 1.2, use probes identified in this document as “for analyzers with 90-pin pod connectors.”

90-pin pod connector (pages 10 to 36)
16950B, 16951B
U4164A, U4154A/B, and 16962A

40-pin pod connector (pages 47 to 70)
16911A
16910A
16800 Series benchtop analyzers

Direct connect probe/cables (pages 37 to 39)
U4164A
U4154A/B, 16850 Series

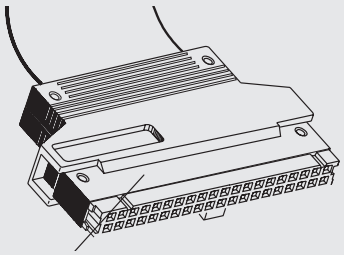

Figure 1.1. 40-pin pod connector

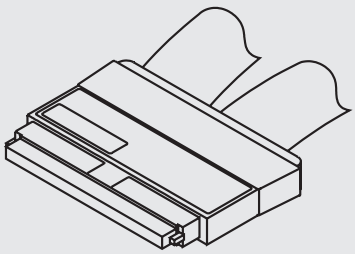

Figure 1.2. 90-pin pod connector

- Impedance
  High input impedance ensures minimum intrusion on your circuit. Although many probes might be acceptable for lower frequencies, capacitive loading becomes significant at higher frequencies. The Keysight probing products perform over a wide frequency spectrum.

- Ruggedness
  Probes with quality mechanical design provide solid electrical connections. Intermittent open circuits would only add one more variable to your debugging equation. Keysight probes are mechanically designed to relieve strain and ensure rugged, reliable connection.

- Immunity to Noise
  Electromagnetic noise can corrupt data captured by the logic analyzer. Keysight probing solutions are designed for a high immunity to transient noise.

- Performance
  Keysight logic analyzers have front-end circuitry that supports the state and timing specifications of the analyzer. This circuitry, together with the Keysight probing solutions described in this document, will accurately capture the target signals at the specified clock rates.

Other considerations

Physical connection compatibility between various Keysight probes may allow you to mix and match a variety of probes and accessories. However, a probe accessory designed for slower clock speeds will not deliver high-speed target performance simply because it is used with a higher speed analyzer module. Also, the serial connection of multiple probe leads and/or accessories will degrade signal integrity.

Probe Selection Guide for All Keysight Logic Analyzers

Logic analyzer compatibility

- U4164A, U4154A/B
- 16850A Series
- 16962A, 16951B, 16950A/B
- 16760A, 16756A, 16755A, 16754A, 16753A

Note: U4201A logic analyzer cable(s) are required when using 90-pin probes with the U4164A, U4154A/B or 16850A Series logic analyzers.

	Soft touch connectorless probes **All soft touch probes are supplied with 5 retention modules**			
Model number	**E5398A**	**E5406A** **E5402A** [1]	**E5390A**	**E5405B**
Application	Quick connection to many channels in a small footprint without a header designed into the target			
Number of channels	17 16 data, 1 clock	34 32 data, 2 clocks	34 32 data, 2 clocks	17 16 data, 1 clock
Supported signal types	Differential or single-ended clock single-ended data			Differential or single-ended clock and or data
Maximum data rate	4 Gb/s	4 Gb/s	4 Gb/s	4 Gb/s
Minimum signal amplitude	250 mV_{p-p}	250 mV_{p-p}	250 mV_{p-p}	V_{max} - V_{min} 200 mV
Connection to target system	Requires half-size soft touch footprint designed into the target	Requires Pro Series soft touch footprint designed into the target	Requires original soft touch footprint designed into the target	Requires Pro Series soft touch footprint designed into the target system
Input capacitance	< 0.7 pF	< 0.7 pF	< 0.7 pF	< 0.7 pF
Kit of 5 additional retention modules	E5396-68702	E5403A	E5387-68701	E5403A
Number of probes required per U4201A cable	1	1	1	2

1. The E5402A Soft Touch Pro probe is a low profile right angle version of the E5406A above.

Probe Selection Guide for All Keysight Logic Analyzers (Continued)

Logic analyzer compatibility

- U4164A, U4154A/B
- 16850A Series
- 16962A, 16951B, 16950A/B
- 16760A, 16756A, 16755A, 16754A, 16753A

Note: U4201A logic analyzer cable(s) are required when using 90-pin probes with the U4164A, U4154A/B or 16850A Series logic analyzers.







	Samtec probes		Mictor probes	General purpose flying lead sets	
Model number	**E5378A**	**E5379A**	**E5380B**	**E5382B**	**E5381B**
Application	Quick connection to many channels in a small footprint			Flexible connection to many signals	
Number of channels	34 32 data, 2 clocks	17 16 data, 1 clock	34 32 data, 2 clocks	17 16 data, 1 clock	17 16 data, 1 clock
Supported signal types	Differential or single-ended clock single-ended data	Differential or single-ended clock and or data	Single-ended clock single-ended data	Differential or single-ended clock single-ended data	Differential or single-ended clock and or data
Maximum data rate	1.5 Gb/s	1.5 Gb/s	600 Mb/s	1.5 Gb/s	1.5 Gb/s
Minimum signal amplitude	250 mV_{p-p}	V_{max} - V_{min} 200 mV	300 mV_{p-p}	250 mV_{p-p}	V_{max} - V_{min} 200 mV
Connection to target system	Requires 100-pin Samtec connector designed into the target system	Requires 100-pin Samtec connector designed into the target system	Requires 38-pin Mictor connector designed into the target system	Compatible with a wide assortment of accessories to connect to individual leads	Compatible with a wide assortment of accessories to connect to individual leads
Input capacitance	1.5 pF	1.5 pF	3.0 pf	1.3 pF	0.9 pF
Additional supplies	See Table 4 page 34 for shrouds and pc board connectors			See Table 1 (page 10)	See Figure 4.4 (page 13)
Number of probes required per U4201A cable	1	2	1	2	2

Probe Selection Guide for All Keysight Logic Analyzers (Continued)

U4200A Series direct-connect probes selection guide

Direct connect probes connect directly to the DUT and the 160-pin front panel connector of the compatible logic analyzers listed below.

Logic analyzer compatibility

- U4164A, U4154A/B
- 16850A Series

Note: The U4206A is for use only with the U4164A when in quad sample state mode or ¼ channel timing mode.



	Soft touch connectorless probes		Mictor probe	General purpose flying lead set
Model number	**U4206A (see note above)**	**U4204A**	**U4205A**	**U4203A**
Application	Quick connection to many channels in a small footprint without a header designed into the target system		Quick connection to many signals in a small footprint	Flexible connection to individual signals
Number of channels	34 32 data, 2 clock	34 32 data, 2 clock	34 32 data, 2 clock	34 32 data, 2 clock
Supported signal types	Differential or single-ended clock, single-ended data	Differential or single-ended clock, single-ended data	Single-ended clock, single-ended data	Differential or single-ended clock, single-ended data
Maximum data rate	4 Gb/s	3.2 Gb/s	600 Mb/s	1.5 Gb/s
Minimum signal amplitude	$V_{max} - V_{min}$ 300 mV/200 mV [1]	$V_{max} - V_{min}$ 200 mV	$V_{max} - V_{min}$ 200 mV	$V_{max} - V_{min}$ 200 mV
Connection to target system	Requires Pro Series soft touch footprint designed into the target	Requires Pro Series soft touch footprint designed into the target	Requires 38-pin Mictor connector designed into the target system	Compatible with a wide assortment of accessories to connect to individual leads
Input capacitance	< 0.7 pF	< 0.7 pF	3.0 pF	< 0.9 pF
Additional supplies	Kit of 5 additional retention modules	Kit of 5 additional retention modules	See Table 1 for PC board connectors and shrouds	See Figure for additional leads and grabbers
Orderable as	E5403A	E5403A		

1. 300 mV input required for data rates greater than 2.5 Gb/s.

Probe Selection Guide for All Keysight Logic Analyzers (Continued)

40-pin probes selection guide

Compatible with Keysight models 16910A/11A, 16800 Series, 16750/51/52A/B, 1674X Series, 1671x Series, 165xx Series modules, 1690 Series, 1680 Series, 1670 Series, 1660 Series, 1650 Series, and E9340 logic analyzers.






	Soft touch connectorless probes Supplied with five retention modules			Samtec probe	Mictor probe	General purpose flying lead set
Model number	**E5396A**	**E5404A**	**E5394A**	**E5385A**	**E5346A**	**E5383A**
Application	Quick connection to many channels in a small footprint without a header designed into the target system			Quick connection to many signals in a small footprint	Quick connection to many signals in a small footprint	Flexible connection to individual signals
Number of channels	17 16 data, 1 clock	34 32 data, 2 clock	34 32 data, 2 clock	34 32 data, 2 clock	34 32 data, 2 clock	17 16 data, 1 clock
Supported signal types	All probes: single-ended clock, single-ended data					
Maximum data rate	> 2.5 Gb/s	> 2.5 Gb/s	> 2.5 Gb/s	1.5 Gb/s	Equivalent to the logic analyzer data rate the probe is attached to	Equivalent to the logic analyzer data rate the probe is attached to
Minimum signal amplitude	500 mV p-p	500 mV p-p	500 mV p-p	500 mV p-p	500 mV p-p [1]	600 mV p-p
Connection to target system	Requires half-size soft touch footprint designed into the target	Requires Pro Series soft touch footprint designed into the target	Requires original soft touch footprint designed into the target	Requires 100-pin Samtec connector designed into the target system	Requires 38-pin Mictor connector designed into the target system [2]	Compatible with a wide assortment of accessories to connect to individual leads
Input capacitance	< 0.7 pF	< 0.7 pF	< 0.7 pF	1.5 pF	3.0 pF	1.5 pF
Additional supplies	Additional five retention modules	Additional five retention modules	Additional five retention modules	See Table 1 for PC board connectors and shrouds	See Table 1 for pc board connectors and shrouds	See Figure for additional leads and grabbers
Orderable as	Order kit E5396-68702	Order kit E5403A	Order kit E5387-68701			

1. Model E5339A low voltage Mictor probe = 250 mV p-p.
2. Model E5351A Unterminated Mictor probe requires isolation networks to be provided on the target system. See page 64 for details.

Selecting the Optimum Probing Strategy

What is the best way to probe your signals, given their unique characteristics?

Available probing options for all Keysight logic analyzers		
	Connectorless	**Connector Samtec**
	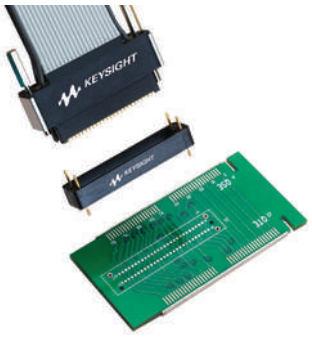	
Connection to the target system	Requires appropriate pro series soft touch or original soft touch footprint designed into the target system. Retention module is used for alignment and mechanical retention only.	Requires 100-pin Samtec connector designed into the target system
Advantages	– Reduces cost and shortens the design cycle by eliminating a connector – Eliminates the capacitive loading of a connector, which gives you the lowest-loading (less than 0.7 pF), highest-performance (> 2.5 Gb/s rate) logic analyzer probing option available – Pliable micro spring-pin design with four-point crown tip allows you to easily attach and get a reliable, repeatable contact even for contaminated or uneven board surfaces – Flow through signal routing streamlines design flow and maintains differential pair spacing to ensure constant differential-mode impedance and virtually eliminate stubs – Acquire high-speed single-ended or differential signals without impacting the performance of your circuit, while providing an accurate representation to the logic analyzer – Provides ability to attach retention module to probe and browse multiple signals by pressing the probe against the target device – Compatible with all board finishes, including lead free	– High-performance connector solution (1.5 pF loading, 1.5 Gb/s data rate) – Supports single-ended and differential signals – 3 times the performance and half the loading of Mictor solution
Disadvantages	– Requires up-front design of probe footprint on PCB	– Added cost to include connector – Requires up-front design of connector on PCB

Selecting the Optimum Probing Strategy (Continued)

What is the best way to probe your signals, given their unique characteristics?

Available probing options for all Keysight logic analyzers		
	Connector Mictor	**Flying leads**
		
Connection to the target system	Requires 38-pin Mictor connector designed into the target system	Connects to individual, widely dispersed signals at IC pins, traces, pads, vias
Advantages	– Reliable and cost-effective solution for lower data rates (600 Mb/s) – Supports single-ended signaling – 3.0 pF capacitive loading	– High-performance accessories are based on award winning, InfiniiMax scope probes – Compatible with a wide variety of accessories to connect to IC pins, traces, pads, vias – Maintains a one-to-one signal-to-ground ratio – Doesn't require up-front design effort
Disadvantages	– Added cost to include connector – Combination of through-hole and surface-mount technology can make signal routing and board component loading difficult – Requires up-front design of connector on PCB	– More time-consuming to connect

Probing Solutions for 90-pin Logic Analyzers
General-Purpose Probing

E5382B single-ended flying lead probe set

The E5382B is a 17-channel single-ended flying lead probe compatible with logic analyzers with a 90-pin pod connection. It is capable of acquiring data at the maximum rates of the logic analyzer it is connected to. The E5382B is useful for acquiring signals from dispersed locations or when a mass connection scheme is not available. The E5382B has the following:

- 16 single-ended data inputs
- One differential or single-ended clock input
- Variety of supplied accessories

Unused clock inputs can be used as data inputs.

Table 1. Accessories

	Part number	Description
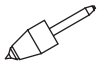	E5382-82103	Probe pin kit, 2 resistive pins per kit
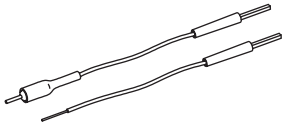	E5382-82101	High-frequency probing kit, 2 resistive signal wires and 4 ground wires per kit
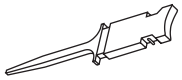	16517-82109	Grabber clip kit, 20 grabbers per kit
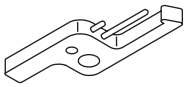	16517-82105	Ground extender kit, 20 ground extenders per kit
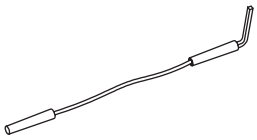	16517-82106	Right-angle ground lead kit, 20 ground leads per kit

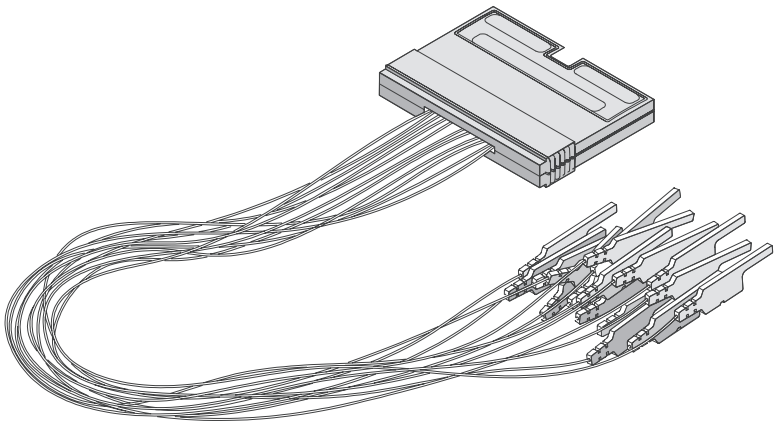

Figure 4.1. E5382B flying lead set.

Probing Solutions for 90-pin Logic Analyzers
General-Purpose Probing (Continued)

Suggested configurations and characteristics

Table 2. E5382B suggested configurations and characteristics

Configuration	Description	Total lumped input C	Maximum recommended state speed
	130 Ω resistive signal pin (orange) and solder-down ground lead	1.3 pF	1.5 Gb/s
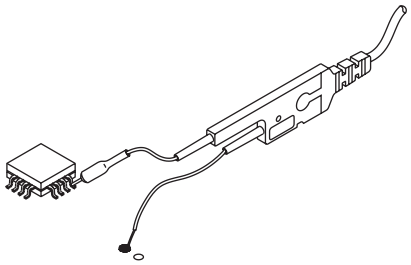	5 cm resistive signal lead (can be soldered-down) and solder-down ground lead	1.6 pF	1.5 Gb/s
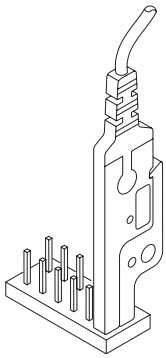	Flying lead and ground extender	1.4 pF	1.5 Gb/s
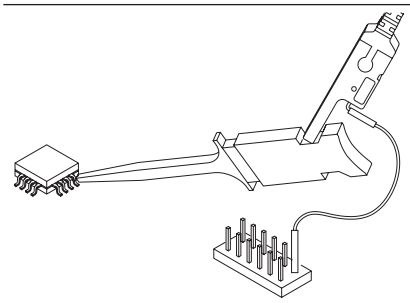	Grabber clip and right-angle 2.0 pf ground lead	2.0 pF	600 Mb/s

Probing Solutions for 90-pin Logic Analyzers
General-Purpose Probing (Continued)

Available accessories

Ground connector

It is essential to ground every tip that is in use. For best performance at high speeds, every tip should be grounded individually to ground in the system under test.

Adapting to coaxial connectors

The Keysight E9638A probe tip to BNC adapter can be used to connect one of the flying lead probes of the E5382B to a BNC connector. To probe other coaxial connectors, use the E9638A adapter, a BNC termination, and an adapter to the other type of coaxial connector. Refer to Figure 4.3.

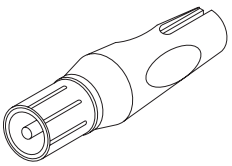

Figure 4.2. 5063-2174 BNC to probe tip adapter.

Note: Examples of convenient connection which may result in degraded performance.

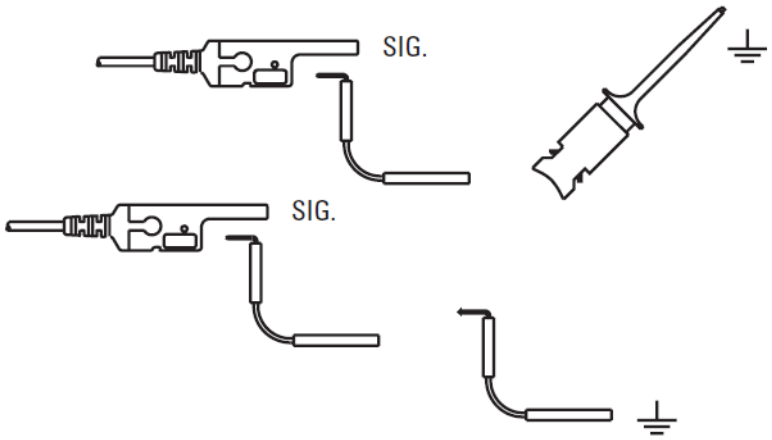

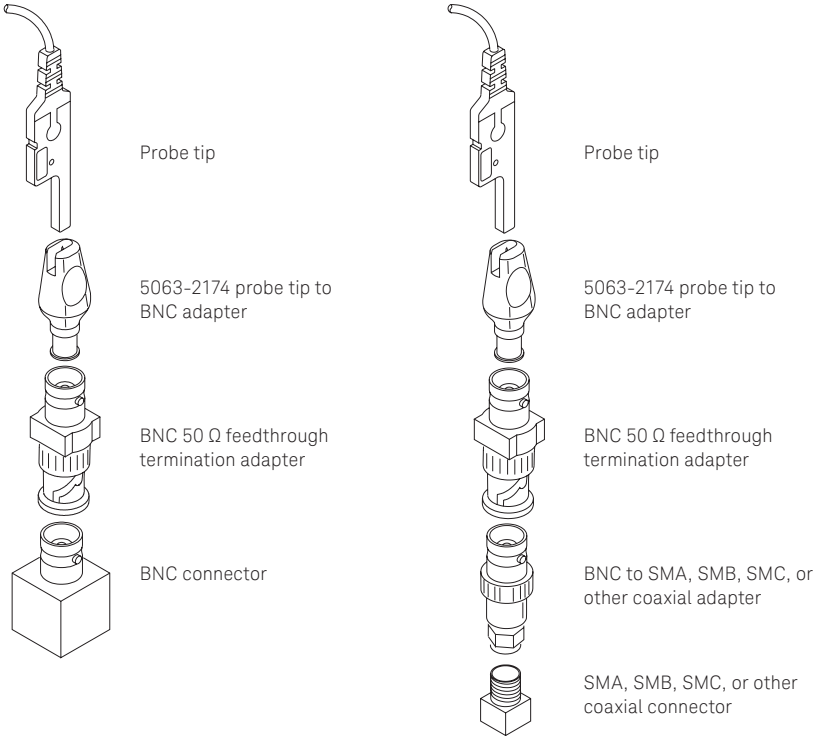

Figure 4.3. Recommended configurations to probe RF coaxial connectors with the E5382B flying lead probes.

Probing Solutions for 90-pin Logic Analyzers
General-Purpose Probing (Continued)

E5381B differential flying-lead probe set

The E5381B is a 17-channel differential flying-lead probe compatible with logic analyzers with a 90-pin pod connection. It is capable of acquiring data at the maximum rates of the logic analyzer it is connected to. The E5381B is useful for acquiring signals from dispersed locations or when a mass connection scheme is not available. The E5381B has the following:

- 16 differential or single-ended data inputs
- One differential or single-ended clock input
- Variety of supplied accessories

Unused clock inputs can be used as data inputs.

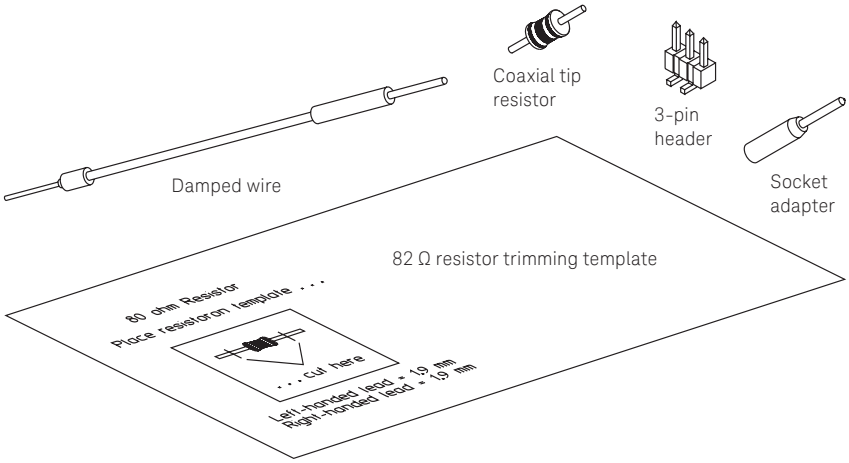

Figure 4.4. E5381B differential flying-lead probe set accessories.

Replaceable parts and additional accessories

Description	Quantity	Keysight part number
82 Ω resistor trimming template	1	01131-94309
Accessory kit - coaxial tip resistors (82 Ω)	34	E5381-82101
Accessory kit - socket adapter	34	E5381-82102
Accessory kit - damped wire (160 Ω)	34	E5381-82105
Accessory kit - 3-pin header	34	E5381-82104
Cable - main	1	E5381-61603

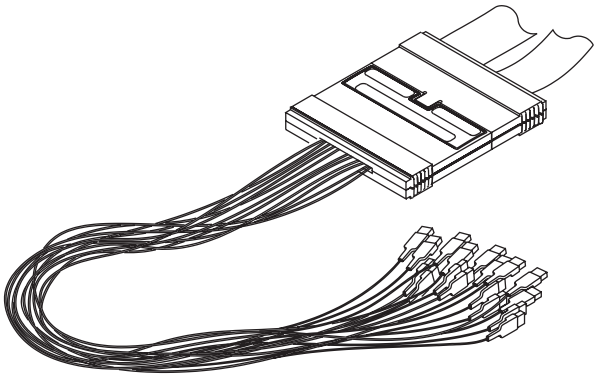

Figure 4.5. E5381B differential flying-lead probe set.

Probing Solutions for 90-pin Logic Analyzers
General-Purpose Probing (Continued)

Suggested configurations and characteristics

Table 3. E5381B suggested configurations and characteristics

Configuration	Description	Total lumped input C	Maximum recommended state speed
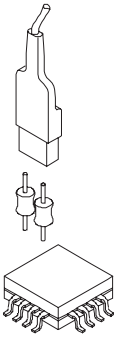	Coaxial tip Resistor (82 Ω blue) Solder attach to components, traces, pads, or VIAs.	0.9 pF	1.5 Gb/s
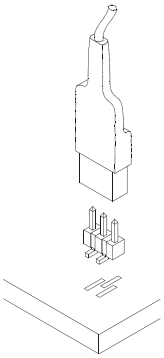	3-pin header	1.0 pF	1.5 Gb/s
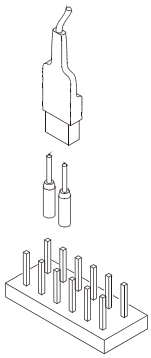	Socket adapter	1.1 pF	1.5 Gb/s
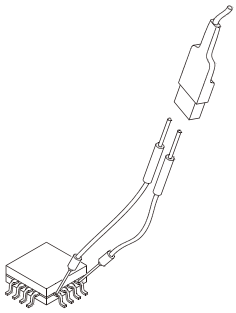	Damped wire Solder attach to components, traces, pads, or VIAs.	1.3 pF	1.5 Gb/s

Probing Solutions for 90-pin Logic Analyzers
General-Purpose Probing (Continued)

Recommended probe configurations

For the best performance, use the following configurations. The configurations are listed in the recommended order.

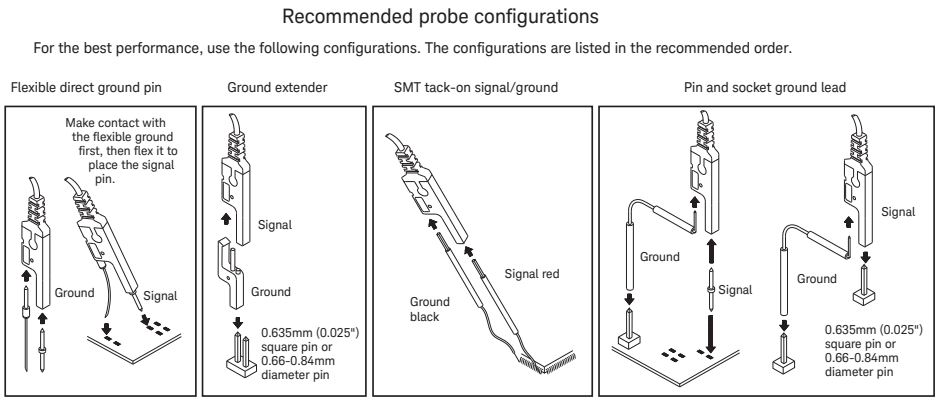

Figure 4.6. Probing configurations that give the best signal fidelity.

Probing Solutions for 90-pin Logic Analyzers
Soft Touch Connectorless Probing

Several options are available for connecting Keysight logic analyzers with 90-pin pod connectors to a target system using mass connections.

Keysight Pro Series soft touch connectorless logic analyzer probes

Keysight has developed connectorless logic analyzer probes based on soft touch probing technology. Connectorless logic analyzer probing removes the connector that is traditionally attached to the target board and replaces it with an array of probe pads. This reduces the probe load on the target by eliminating the loading associated with the physical body of the connector. Additionally, this streamlines the design flow by eliminating the need to assign a logic analyzer connector to the bill of material of your board, procuring those connectors and then having them loaded onto your board.

Keysight's soft touch connectorless probes use micro spring-pin technology to provide reliable contact which is not dependent on the planarity of the PC board or the plating processes used to fabricate the board. No special cleaning processes are required when using Keysight's soft touch probes.

The new Keysight Pro Series soft touch connectorless probes offer a 30% smaller footprint than the original soft touch probes and are the basis for the industry standard connectorless probing footprint.

The probes use a retention module that ensures soft touch pin-to-PC board pad alignment and holds the probe in place while in use. The Pro Series soft touch uses a "top-side" mountable retention module. The retention module is mounted on the same side of the board as the probing footprint so there is no need to access the back-side of the board. Because there is no requirement for the retention module pins to extend beyond the back-side of the board, the retention module is compatible with virtually any board thickness.

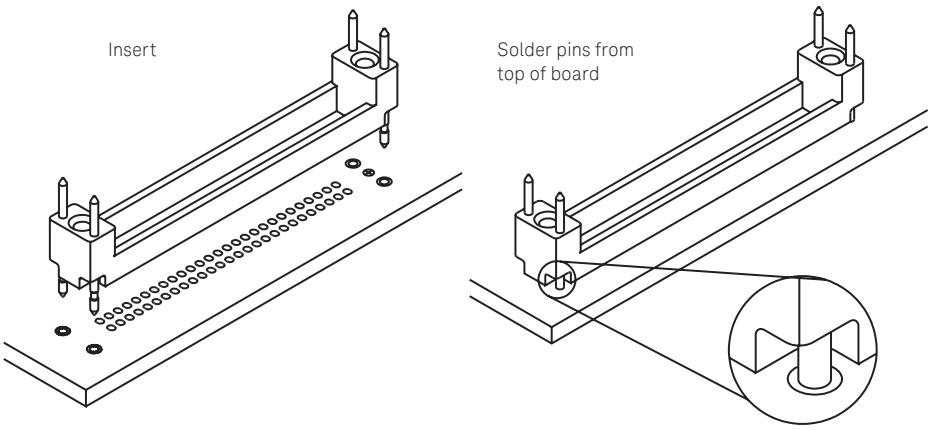

Figure 4.7. "Top-side" mountable retention module.

Probing Solutions for 90-pin Logic Analyzers
Soft Touch Connectorless Probing (Continued)

E5405B Differential Pro series soft touch connectorless probe

The E5405B is a 17-channel differential Pro Series soft touch connectorless probe compatible with all Keysight logic analyzers that have a 90-pin pod connector. It is capable of acquiring data at the maximum rates of the logic analyzer it is connected to.

Features

- No connector on the target board
- Top-side retention module
- Industry-standard connectorless footprint
- 17 channels, differential or single-ended clock and data
- Extremely low, < 0.7 pF, equivalent load capacitance
- Capable of data rates of 4 Gb/s (maximum rate dependent on analyzer used)
- 200 mV Vmax–Vmin minimum signal amplitude
- Robust and reliable soft touch technology

Unused clock inputs can be used as data inputs.

The E5405B uses the same retention module as the E5404A and E5406A Pro Series soft touch connectorless probe.

A kit of five retention modules is shipped with each Pro Series soft touch probe. Additional kits can be ordered using Keysight part number E5403A.

E5406A/E5402A Pro Series soft touch connectorless probes

The E53406A/E5402A are 34-channel single-ended Pro Series soft touch connectorless probe compatible with all Keysight logic analyzers that have a 90-pin pod connector. The E5402A is a low profile right angle version of the E5406A probe.

Features

- No connector on the target board
- Top-side mount retention module
- Industry-standard connectorless footprint
- 34 channels, single-ended or differential clock and single-ended data
- Extremely low, < 0.7 pF, equivalent load capacitance
- Capable of data rates of 4 Gb/s (maximum rate dependent on analyzer used)
- 250 mV p-p minimum signal amplitude
- Robust and reliable soft touch technology

Unused clock inputs can be used as data inputs.

The E5406A (used with logic analyzers with a 90-pin cable connector) uses the same footprint, pinout, and retention module as the E5404A and E5402A Pro Series soft touch connectorless probes (used with logic analyzers with a 40-pin cable connector).

A kit of five retention modules is shipped with each Pro Series soft touch probe. Additional kits can be ordered using Keysight part number E5403A. The low profile E5402A probe uses retention module Keysight part number E5412A.

Probing Solutions for 90-pin Logic Analyzers
Soft Touch Connectorless Probing (Continued)

E5390A single-ended soft touch connectorless probe

The E5390A is a 34-channel single-ended soft touch connectorless probe compatible with all Keysight logic analyzers that have a 90-pin pod connector. It is capable of acquiring data at the maximum rates of the logic analyzer it is connected to. The probe has the following inputs:

- 32 single-ended data inputs
- Two differential or single-ended clock inputs
- < 0.7 pf input capacitance
- 250 mV p-p minimum signal amplitude

Unused clock inputs can be used as data inputs.

The E5390A (used with logic analyzers with a 90-pin pod connector) uses the same footprint, pinout and retention module as the E5394A single-ended soft touch connectorless probe (used with logic analyzers with a 40-pin pod connector).

A kit of five retention modules is shipped with each soft touch probe. Additional kits can be ordered using Keysight part number E5387-68701.

E5398A half-size soft touch connectorless probe

The E5398A is a small space saving probe compatible with all Keysight logic analyzers that have a 90-pin cable connector. It is a 17-channel, single-ended probe capable of capturing data at the maximum rates of the logic analyzer it is connected to. The probe has the following inputs:

- 16 single-ended data inputs
- One differential or single-ended clock input
- < 0.7 pf equivalent load capacitance
- 250 mV p-p minimum signal amplitude

Unused clock inputs can be used as data inputs.

The E5398A (used with logic analyzers with a 90-pin cable connector) uses the same footprint, pinout, and retention module as the E5396A single-ended soft touch connectorless probe (used with logic analyzers with a 40-pin cable connector).

More information about soft touch connectorless probes is available on the web at **www.keysight.com/find/softtouch.**

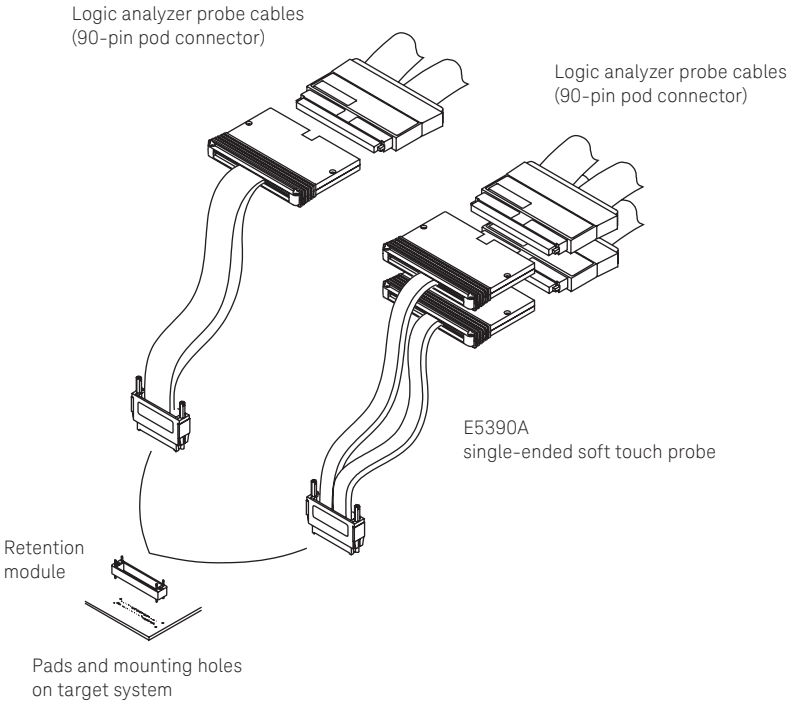

Figure 4.8. Soft touch probes.

Probing Solutions for 90-pin Logic Analyzers
Soft Touch Connectorless Probing (Continued)

Probe dimensions

The following figures show dimensions, footprint, and pinout information you will need to design your target system board for use with the Keysight soft touch probes.

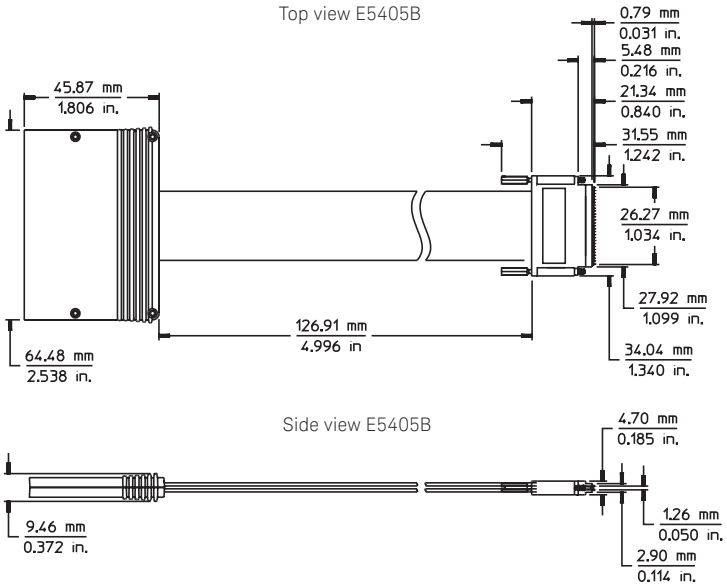

Figure 4.9. E5405B probe dimensions.

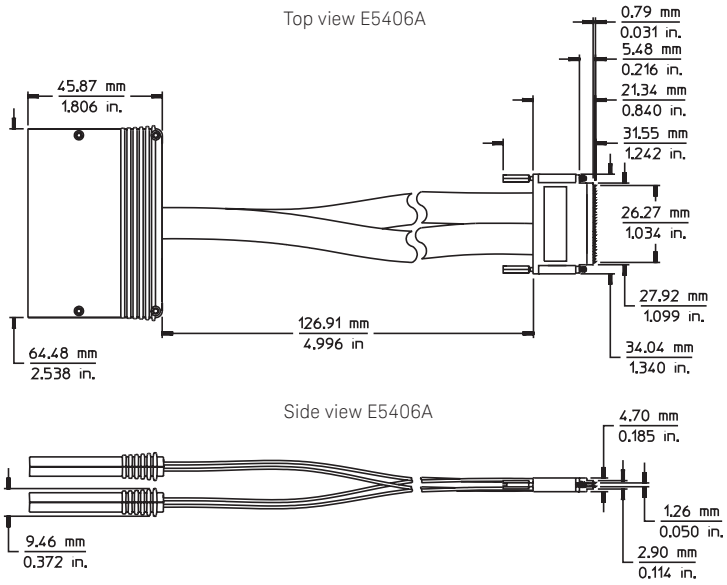

Figure 4.10. E5406A probe dimensions.

Probing Solutions for 90-pin Logic Analyzers
Soft Touch Connectorless Probing (Continued)

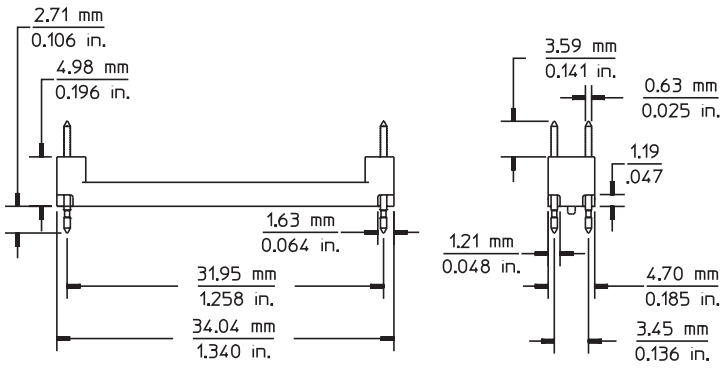

Figure 4.11. Pro Series soft touch retention module dimensions, part number E5403A.

Pro Series soft touch retention module dimensions

The following dimensions show the soft touch probe attached to the retention module. The retention module is mounted on the PC board.

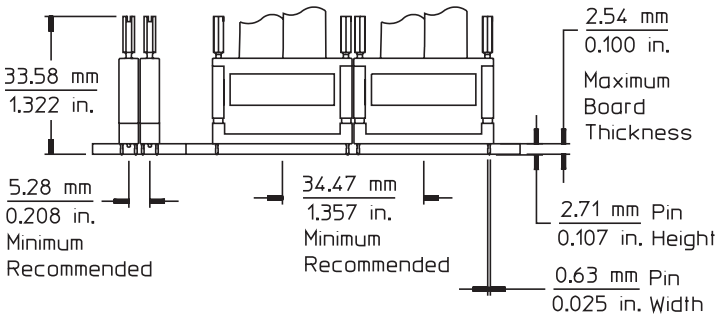

Figure 4.12. Pro Series soft touch side-by-side dimensions with retention module, part number E5403A.

Probing Solutions for 90-pin Logic Analyzers
Soft Touch Connectorless Probing (Continued)

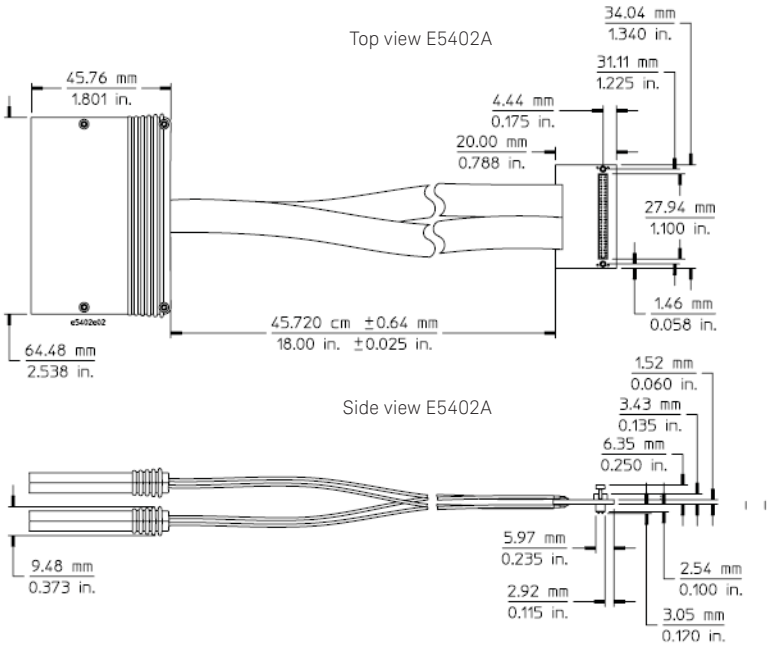

Figure 4.13. E5402A probe dimensions.

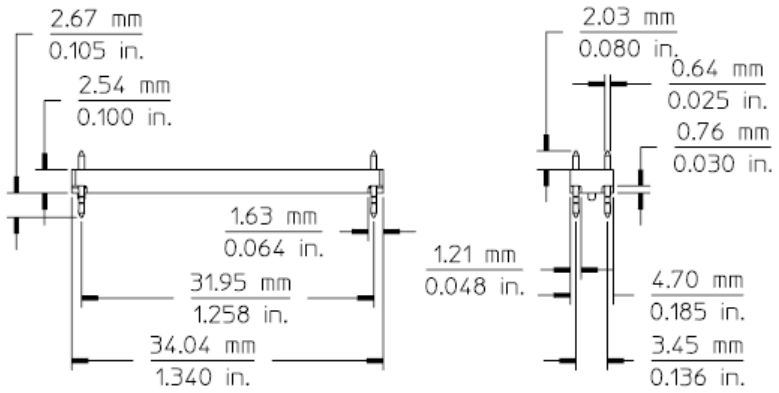

Figure 4.14. E5412A retention module dimensions.

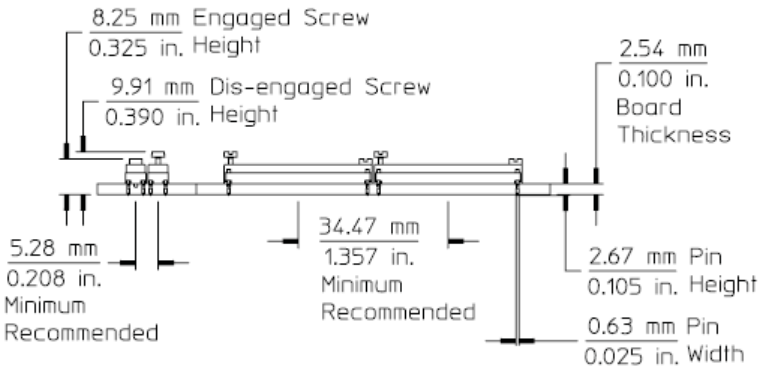

Figure 4.15. E5412A side-by-side dimensions.

Probing Solutions for 90-pin Logic Analyzers
Soft Touch Connectorless Probing (Continued)

Drawing notes:

1. Maintain a solder mask web between pads when traces are routed between the pads on the same layer. The solder mask may not encroach onto the pads within the pad dimension shown.
2. VIAs not allowed on these pads. VIA edges may be tangent to pad edges as long as a solder mask web between VIAs and pads is maintained.

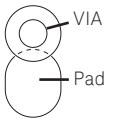

3. Surface finishes on pads should be HASL immersion silver, or gold over nickel.
4. This footprint is compatible with retention module Keysight part number E5405-68702.
5. This through hole is not used with the Keysight retention module.
6. Plated through hole should not be tied to ground plane for thermal relief.

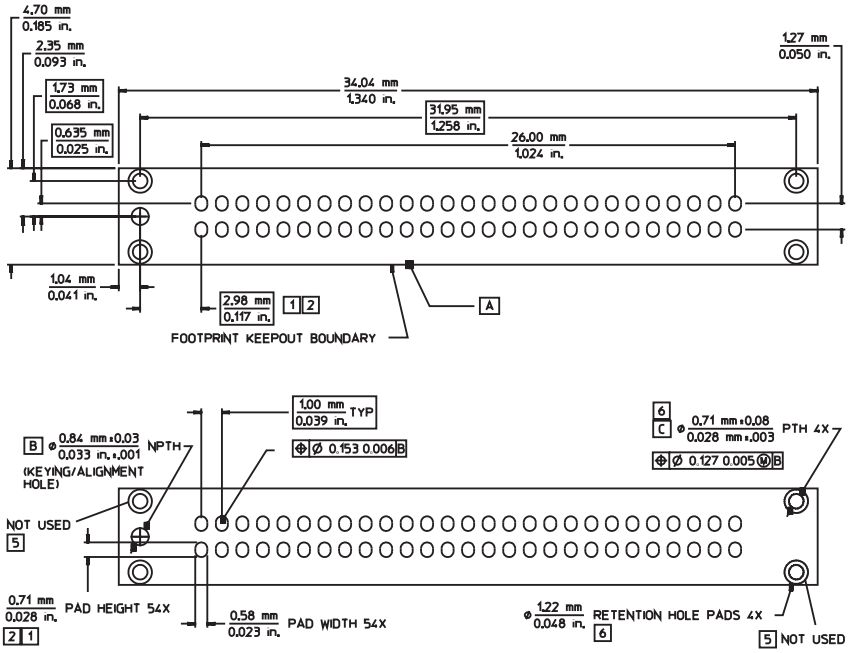

Figure 4.16. Pro Series soft touch footprint dimensions (see drawing notes).

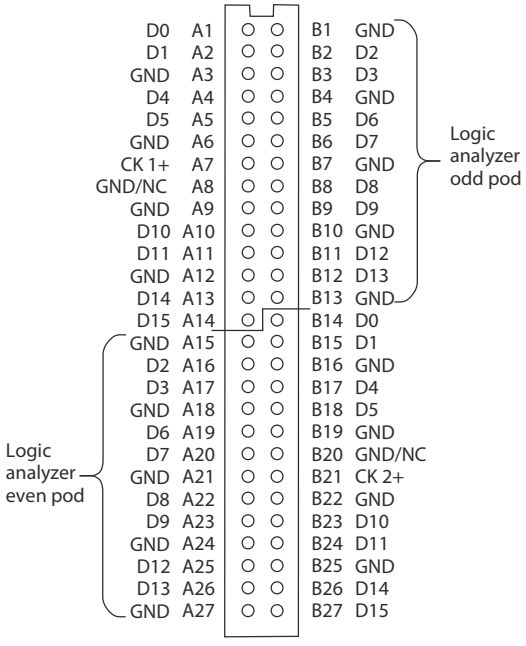

Figure 4.17. Pad numbers for E5404/06A 34-channel single-ended probes.

Probing Solutions for 90-pin Logic Analyzers
Soft Touch Connectorless Probing (Continued)

E5404/06A 34-channel single-ended probe			Logic analyzer	
Signal name	**Pad #**		**Channel**	**Pod**
D0	A1	→	0	Whichever pod is connected to "Odd" on the E5404/06A probe
D1	A2	→	1	
Ground	A3			
D4	A4	→	4	
D5	A5	→	5	
Ground	A6			
Clock 1+	A7	→	Clock	
GND/NC/Clock 1–	A8			
Ground	A9			
D10	A10	→	10	
D11	A11	→	11	
Ground	A12			
D14	A13	→	14	
D15	A14	→	15	
Ground	A15			Whichever pod is connected to "Even" on the E5404/06A probe
D2	A16	→	2	
D3	A17	→	3	
Ground	A18			
D6	A19	→	6	
D7	A20	→	7	
Ground	A21			
D8	A22	→	8	
D9	A23	→	9	
Ground	A24			
D12	A25	→	12	
D13	A26	→	13	
Ground	A27			

E5404/06A 34-channel single-ended probe			Logic analyzer	
Signal name	**Pad #**		**Channel**	**Pod**
Ground	B1			Whichever pod is connected to "Odd" on the E5404/06A probe
D2	B2	→	2	
D3	B3	→	3	
Ground	B4			
D6	B5	→	6	
D7	B6	→	7	
Ground	B7			
D8	B8	→	8	
D9	B9	→	9	
Ground	B10			
D12	B11	→	12	
D13	B12	→	13	
Ground	B13			
D0	B14	→	0	Whichever pod is connected to "Even" on the E5404/06A probe
D1	B15	→	1	
Ground	B16			
D4	B17	→	4	
D5	B18	→	5	
Ground	B19			
GND/NC/Clock 2–	B20			
Clock 2+	B21	→	Clock	
Ground	B22			
D10	B23	→	10	
D11	B24	→	11	
Ground	B25			
D14	B26	→	14	
D15	B27	→	15	

Probing Solutions for 90-pin Logic Analyzers
Soft Touch Connectorless Probing (Continued)

D0+	A1	B1	GND
D0-	A2	B2	D1-
GND	A3	B3	D1+
D2+	A4	B4	GND
D2-	A5	B5	D3-
GND	A6	B6	D3+
D4+	A7	B7	GND
D4-	A8	B8	D5-
GND	A9	B9	D5+
D6+	A10	B10	GND
D6-	A11	B11	D7-
GND	A12	B12	D7+
NC	A13	B13	GND
NC	A14	B14	CLK-
GND	A15	B15	CLK+
D8+	A16	B16	GND
D8-	A17	B17	D9-
GND	A18	B18	G9+
D10+	A19	B19	GND
D10-	A20	B20	D11-
GND	A21	B21	D11+
D12+	A22	B22	GND
D12-	A23	B23	D13-
GND	A24	B24	E13+
D14+	A25	B25	GND
D14-	A26	B26	D15-
GND	A27	B27	D15+

Figure 4.18. Pad numbers for E5405B 17-bit differential probe.

Probing Solutions for 90-pin Logic Analyzers
Soft Touch Connectorless Probing (Continued)

E5405B differential probe		Logic analyzer	
Signal name	**Pad #**	**Channel**	**Pod**
D0 (+)	A1 →	0	Whichever pod is plugged into the E5405B probe
D0 (–)	A2		
Ground	A3		
D2 (+)	A4 →	2	
D2 (–)	A5		
Ground	A6		
D4 (+)	A7 →	4	
D4 (–)	A8		
Ground	A9		
D6 (+)	A10 →	6	
D6 (–)	A11		
Ground	A12		
NC	A13		
NC	A14		
Ground	A15		
D8 (+)	A16 →	8	
D8 (–)	A17		
Ground	A18		
D10 (+)	A19 →	10	
D10 (–)	A20		
Ground	A21		
D12 (+)	A22 →	12	
D12 (–)	A23		
Ground	A24		
D14 (+)	A25 →	14	
D14 (–)	A26		
Ground	A27		

E5405B differential probe		Logic analyzer	
Signal name	**Pad #**	**Channel**	**Pod**
Ground	B1		Whichever pod is plugged into the E5405B probe
D1 (–)	B2		
D1 (+)	B3 →	1	
Ground	B4		
D3 (–)	B5		
D3 (+)	B6 →	3	
Ground	B7		
D5 (–)	B8		
D5 (+)	B9 →	5	
Ground	B10		
D7 (–)	B11		
D7 (+)	B12 →	7	
Ground	B13		
Clock–	B14		
Clock+	B15 →	Clock	
Ground	B16		
D9 (–)	B17		
D9 (+)	B18 →	9	
Ground	B19		
D11 (–)	B20		
D11 (+)	B21 →	11	
Ground	B22		
D13 (–)	B23		
D13 (+)	B24 →	13	
Ground	B25		
D15 (–)	B26		
D15 (+)	B27 →	15	

Probing Solutions for 90-pin Logic Analyzers
Soft Touch Connectorless Probing (Continued)

Probe dimensions

The following figures show dimensions, footprint, and pinout information you will need to design your target system board for use with the Keysight soft touch probes.

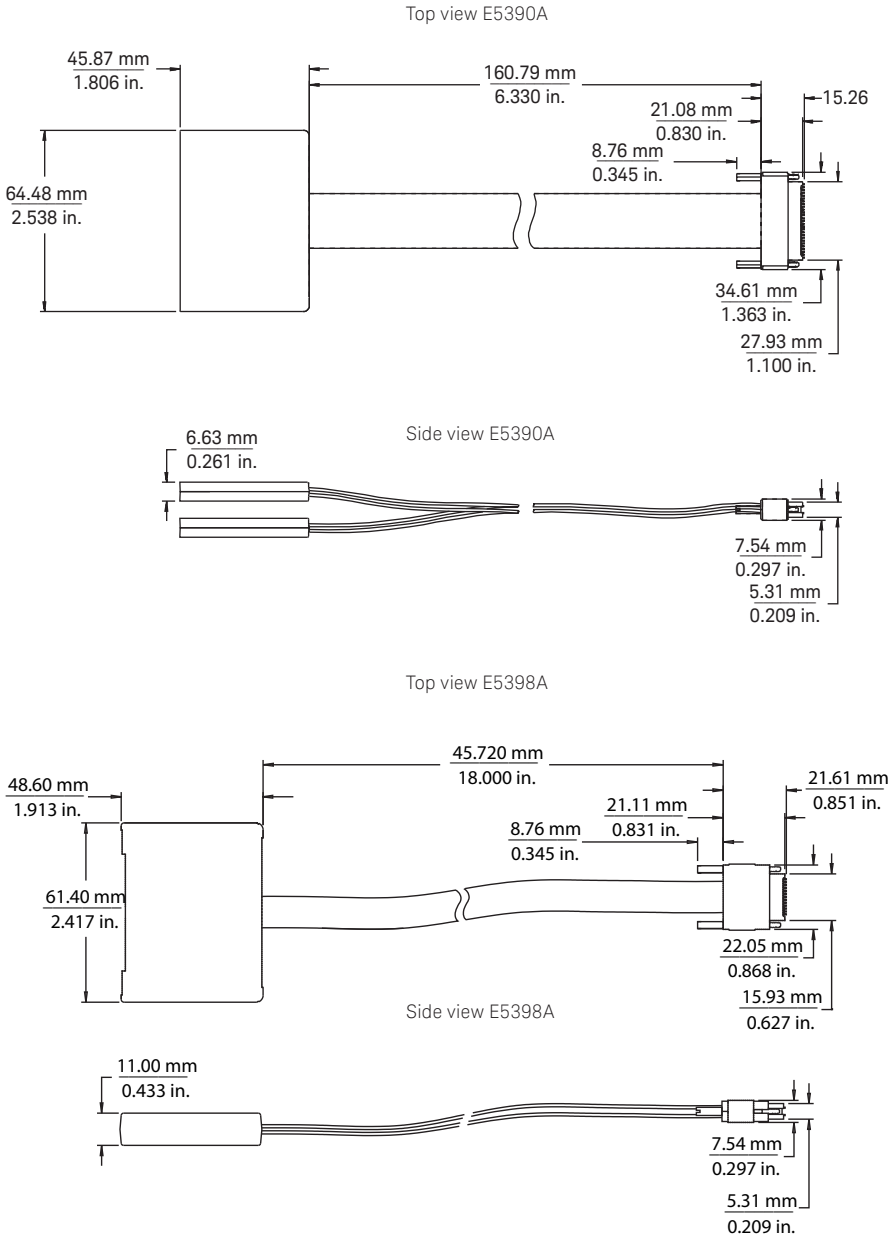

Figure 4.19. Probe dimensions.

Probing Solutions for 90-pin Logic Analyzers
Soft Touch Connectorless Probing (Continued)

Retention module dimensions

The soft touch probes are attached to the PC board using a retention module which ensures pin-to-pad alignment and holds the probe in place. A board thickness of up to 2.54 mm (0.100 inch) is recommended. Insert the retention module into the board, noting the keying pin, and solder the four alignment pins to the backside of the board.

34-channel retention module dimensions

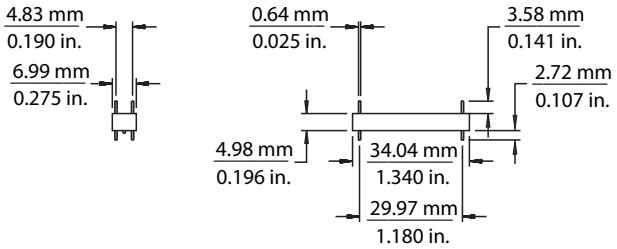

17-channel retention module dimensions

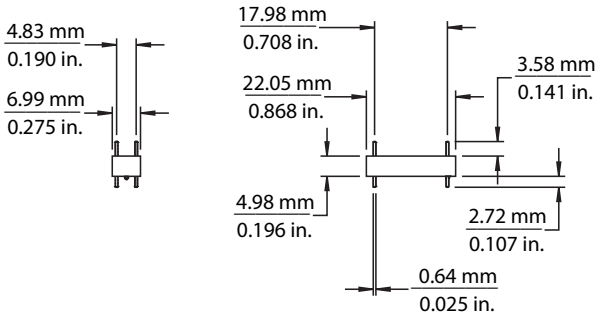

Figure 4.20. Retention module dimensions.

Probe and retention module dimensions

The following dimensions show the soft touch probe attached to the retention module. The retention module is mounted on the PC board.

34-channel probe and retention module dimensions

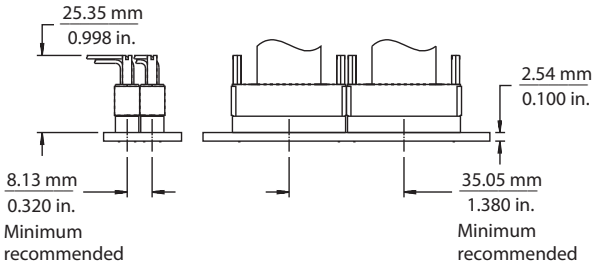

17-channel probe and retention module dimensions

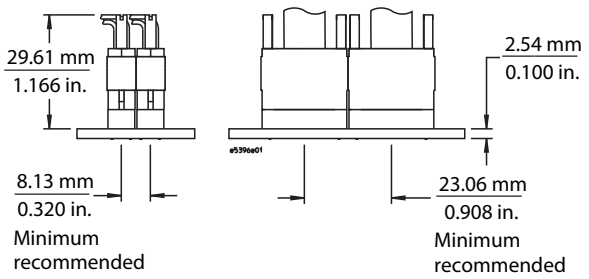

Figure 4.21. Probe and retention module dimensions.

Probing Solutions for 90-pin Logic Analyzers
Soft Touch Connectorless Probing (Continued)

Probe footprint dimensions

Use these probe footprint dimensions for the PC board pads and holes for attaching the retention module.

Soft touch

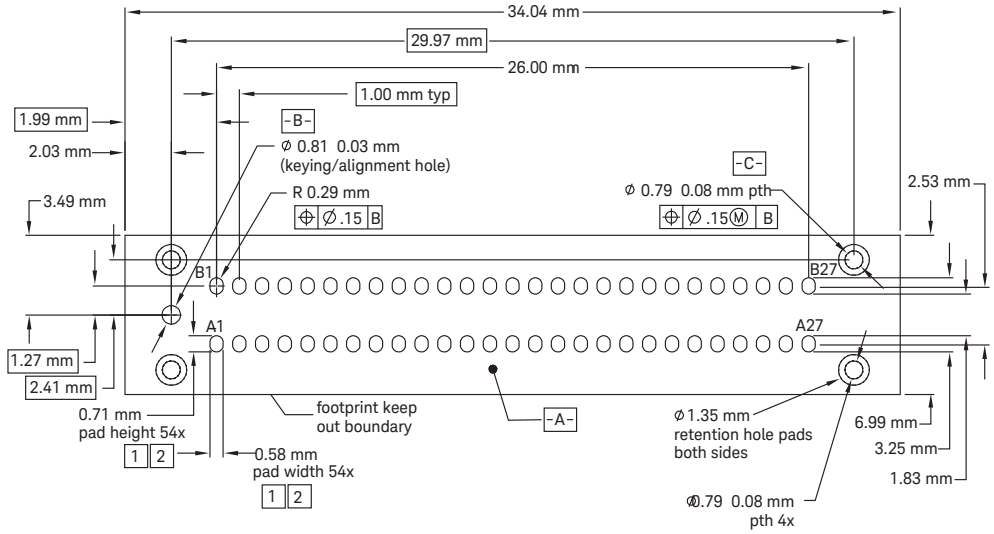

Half-size soft touch

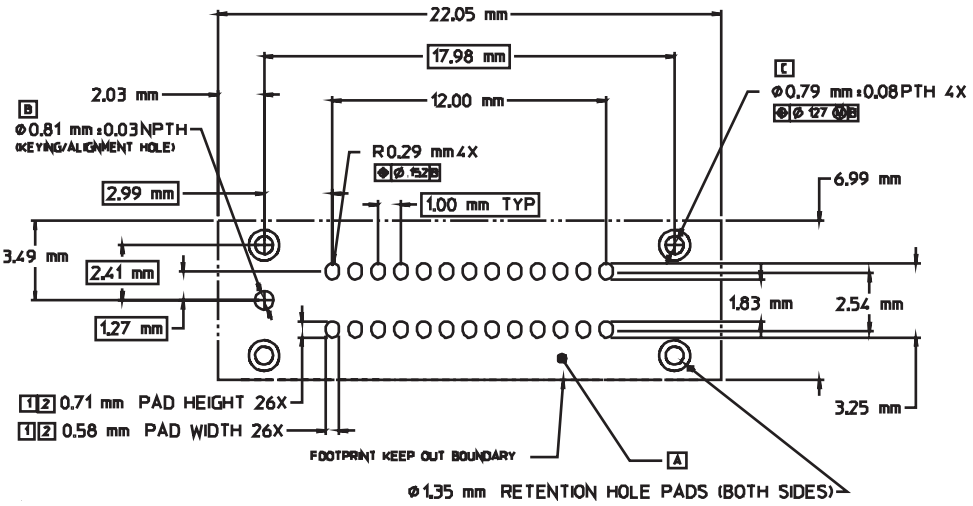

Notes:

1. Must maintain a solder mask web between pads when traces are routed between the pads on the same layer. Soldermask may not encroach onto the pads within the pad dimension shown.
2. Via in pad not allowed on these pads. Via edges may be tangent to pad edges as long as a solder mask web between vias and pads is maintained.
3. Permissible surface finishes on pads are HASL, immersion silver, or gold over nickel.
4. Footprint is compatible with retention module, Keysight part # E5387-68702.
5. Retention module dimensions are 34.04 mm x 7.01 mm x 4.98 mm tall relative to the top surface of the PDB. Retention pins extend 4.32 mm beyond the bottom surface of the RM through the PCB.
6. Assume normal artwork tolerances for pad size dimensions.

Figure 4.22. Footprint dimensions.

Probing Solutions for 90-pin Logic Analyzers
Soft Touch Connectorless Probing (Continued)

Pinout for the E5387A differential soft touch probe

The following graphic and table show the E5387A differential soft touch probe pad numbers and logic analyzer pod inputs.

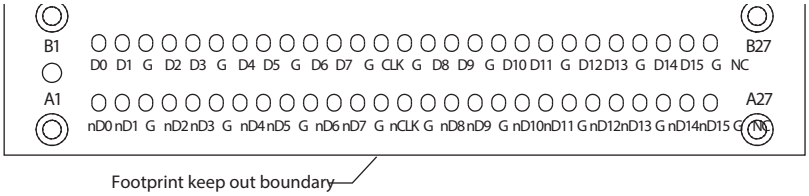

Figure 4.23. Pinout.

E5387A differential probe					**Logic analyzer**	
Negative signals		**Positive signals**				
Signal name	Pad #	Signal name	Pad #		Channel	Pod
D0 (–)	A1	D0 (+)	B1	→	0	Whichever pod is plugged into the E5387A probe
D1 (–)	A2	D1 (+)	B2	→	1	
Ground	A3	Ground	B3			
D2 (–)	A4	D2 (+)	B4	→	2	
D3 (–)	A5	D3 (+)	B5	→	3	
Ground	A6	Ground	B6			
D4 (–)	A7	D4 (+)	B7	→	4	
D5 (–)	A8	D5 (+)	B8	→	5	
Ground	A9	Ground	B9			
D6 (–)	A10	D6 (+)	B10	→	6	
D7 (–)	A11	D7 (+)	B11	→	7	
Ground	A12	Ground	B12			
Clock (–)	A13	Clock (+)	B13	→	Clock	
Ground	A14	Ground	B14			
D8 (–)	A15	D8 (+)	B15	→	8	
D9 (–)	A16	D9 (+)	B16	→	9	
Ground	A17	Ground	B17			
D10 (–)	A18	D10 (+)	B18	→	10	
D11 (–)	A19	D11 (+)	B19	→	11	
Ground	A20	Ground	B20			
D12 (–)	A21	D12 (+)	B21	→	12	
D13 (–)	A22	D13 (+)	B22	→	13	
Ground	A23	Ground	B23			
D14 (–)	A24	D14 (+)	B24	→	14	
D15 (–)	A25	D15 (+)	B25	→	15	
Ground	A26	Ground	B26			
N/C	A27	N/C	B27			

Probing Solutions for 90-pin Logic Analyzers
Soft Touch Connectorless Probing (Continued)

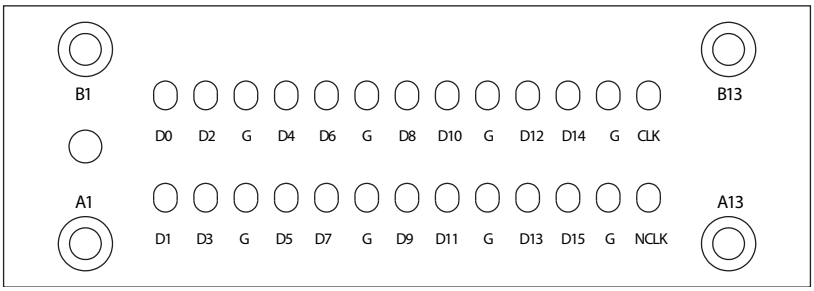

Figure 4.24. Pinout.

E5398A 17-channel single-ended probe			Logic analyzer	
Signal name	**Pad #**		**Channel**	**Pod**
D1	A1	→	1	Whichever pod is plugged into the E5398A probe
D3	A2	→	3	
Ground	A3			
D5	A4	→	5	
D7	A5	→	7	
Ground	A6			
D9	A7	→	9	
D11	A8	→	11	
Ground	A9			
D13	A10	→	13	
D15	A11	→	15	
Ground	A12			
Clock (–)	A13	→	n/a	

E5398A 17-channel single-ended probe			Logic analyzer	
Signal name	**Pad #**		**Channel**	**Pod**
D0	B1	→	0	Whichever pod is plugged into the E5398A probe
D2	B2	→	2	
Ground	B3			
D4	B4	→	4	
D6	B5	→	6	
Ground	B6			
D8	B7	→	8	
D10	B8	→	10	
Ground	B9			
D12	B10	→	12	
D14	B11	→	14	
Ground	B12			
Clock (+)	B13	→	n/a	

Probing Solutions for 90-pin Logic Analyzers
Soft Touch Connectorless Probing (Continued)

Pinout for the E5390A single-ended soft touch probe

The following graphic and table show the E5390A single-ended soft touch probe pad numbers and logic analyzer pod inputs.

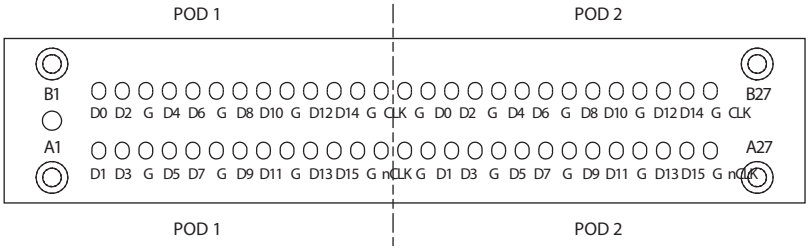

Figure 4.25. Pinout.

E5390A single-ended probe			Logic analyzer	
Signal name	**Pad #**		**Channel**	**Pod**
D1	A1	→	1	Whichever pod is connected to "Odd" on the E5390A probe
D3	A2	→	3	
Ground	A3			
D5	A4	→	5	
D7	A5	→	7	
Ground	A6			
D9	A7	→	9	
D11	A8	→	11	
Ground	A9			
D13	A10	→	13	
D15	A11	→	15	
Ground	A12			
Clock (–)	A13	→	Clock	
D0	B1	→	0	
D2	B2	→	2	
Ground	B3			
D4	B4	→	4	
D6	B5	→	6	
Ground	B6			
D8	B7	→	8	
D10	B8	→	10	
Ground	B9			
D12	B10	→	12	
D14	B11	→	14	
Ground	B12			
Clock (+)	B13	→	Clock	

E5390A single-ended probe			Logic analyzer	
Signal name	**Pad #**		**Channel**	**Pod**
Ground	A14			Whichever pod is connected to "Even" on the E5390A probe
D1	A15	→	1	
D3	A16	→	3	
Ground	A17			
D5	A18	→	5	
D7	A19	→	7	
Ground	A20			
D9	A21	→	9	
D11	A22	→	11	
Ground	A23			
D13	A24	→	13	
D15	A25	→	15	
Ground	A26			
Clock (–)	A27	→	Clock	
Ground	B14			
D0	B15	→	0	
D2	B16	→	2	
Ground	B17			
D4	B18	→	4	
D6	B19	→	6	
Ground	B20			
D8	B21	→	8	
D10	B22	→	10	
Ground	B23			
D12	B24	→	12	
D14	B25	→	14	
Ground	B26			
Clock (+)	B27	→	Clock	

Probing Solutions for 90-pin Logic Analyzers
Soft Touch Connectorless Probing (Continued)

Equivalent probe loads

The following probe load models are based on in-circuit measurements made with a Keysight 8753E 6 GHz network analyzer and a Keysight 54750A TDR/TDT using a 50 Ω test fixture. The following schematic accurately models the probe load out to 6 GHz. PC board pads are not included.

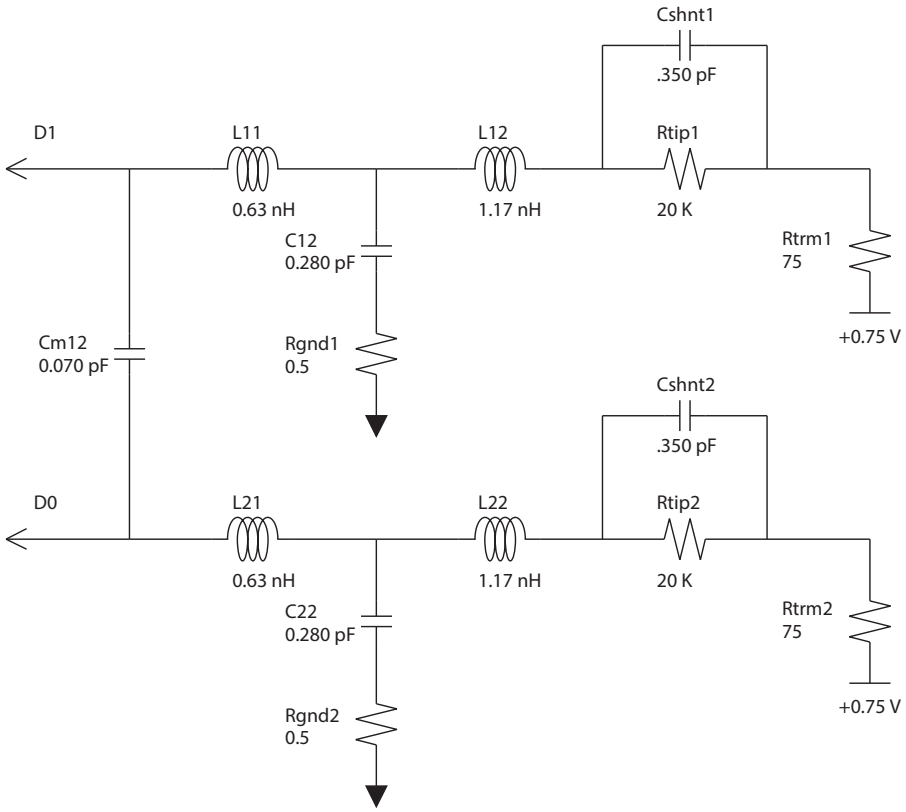

Figure 4.26. Equivalent probe load model.

Probing Solutions for 90-pin Logic Analyzers
Mictor and Samtec Probing

E5378A 100-pin single-ended probe

The E5378A is a 34-channel single-ended Samtec probe capable of capturing data up to 1.5 Gbits/sec (see Figures 4.31 and 4.33 for probe dimensions and equivalent load). The probe has the following inputs:

- 32 single-ended data inputs, in two groups (pods) of 16.
- Two differential clock inputs. Either or both clock inputs can be acquired as data inputs if not used as a clock.
- Two data threshold reference inputs, one for each pod (group of 16 data inputs).

E5379A 100-pin differential probe

The E5379A is a 17-channel differential Samtec probe capable of capturing data up to 1.5 Gbits/sec (see Figures 4.33 and 4.34 for probe dimensions and equivalent load). The probe has the following inputs:

- 16 differential data inputs.
- One differential clock input.
- The clock input can be acquired as a data input if it is not used as a clock.

Refer to Table 4 on page 34 for part numbers for mating connectors and shrouds.

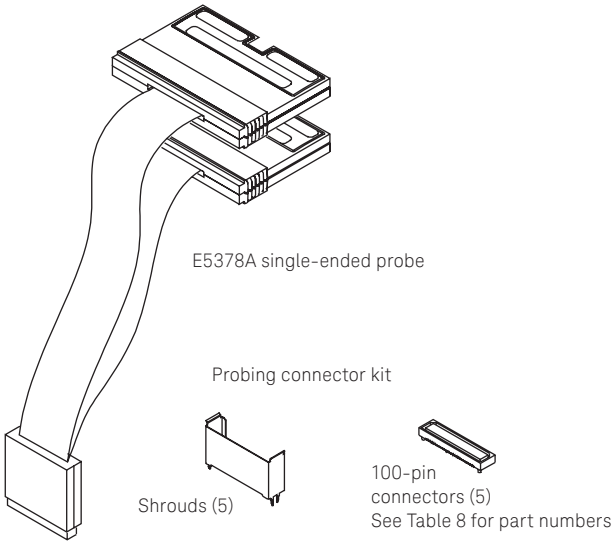

Figure 4.27. Keysight E5378A probe.

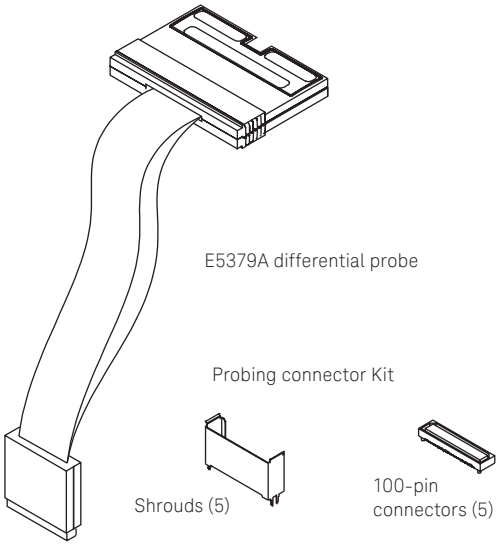

Figure 4.28. Keysight E5379A probe.

Probing Solutions for 90-pin Logic Analyzers
Mictor and Samtec Probing (Continued)

E5380B 38-pin probe

The E5380B is designed to be compatible with the Mictor connector. If you have a target system designed for connection to the E5346A high-density probe adapter, the E5380B probe will connect directly to this same Mictor connector. (For information on the E5346A, refer to pages 62 to 64). The maximum state speed when used with the E5380B probe is 600 Mbits/second. The minimum input signal amplitude required by the E5380B is 300 mV.

The E5380B probe combines two 17-channel cables into a single-ended 38-pin Mictor connector.

Refer to Table 4 for connector, shroud, and kit part numbers.

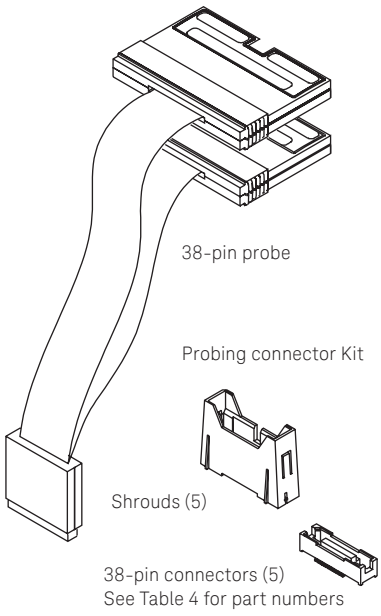

Figure 4.29. Keysight E5380B probe.

Table 4. Mating connectors, shrouds, and kits for Keysight E5378A, E5379A, and E5380B probes

For probe model numbers	Description	Keysight part number
E5378A, E5379A	Kit of 5 support shrouds and 5 100-pin Samtec connectors for PC board thickness up to 1.57 mm (0.062”)	16760-68702
	Kit of 5 support shrouds and 5 100-pin Samtec connectors for PC board thickness up to 3.05 mm (0.120”)	16760-68703
	One 100-pin Samtec connector (also available from Samtec as part number ASP-65067-01)	1253-3620
	One support shroud for PC board thickness up to 1.57 mm (0.062”)	16760-02302
	One support shroud for PC board thickness up to 3.05 mm (0.120”)	16760-02303
E5380B	Kit of 5 support shrouds and 5 38-pin Mictor connectors for PC board thickness up to 1.57 mm (0.062”)	E5346-68701
	Kit of 5 support shrouds and 5 38-pin Mictor connectors for PC board thickness up to 3.175 mm (0.125”)	E5346-68700
	One 38-pin Mictor connector (also available from AMP as part number 2-767004-2)	1252-7431
	One support shroud for PC board thickness up to 1.57 mm (0.062”)	E5346-44701
	One support shroud for PC board thickness up to 3.175 mm (0.125”)	E5346-44704
	One support shroud for PC board thickness up to 4.318 mm (0.700”)	E5346-44703

For further information on designing the E5378A, E5379A, or E5380B probe connectors into your system, refer to the following documents:

Keysight Logic Analyzer Probes (E5378A, E5379A, E5380B, and E5386A) User’s Guide	Mechanical drawings, electrical models, general information on probes for logic analyzers with 90-pin connectors	16760-97016 **http://literature.cdn.keysight.com/litweb/pdf/16760-97016.pdf**
Designing High-Speed Digital Systems for Logic Analyzer Probing	Design recommendations, examples, and analysis for layout of target systems	5988-2989EN **http://literature.cdn.keysight.com/litweb/pdf/5988-2989EN.pdf**

Probing Solutions for 90-pin Logic Analyzers
Mictor and Samtec Probing (Continued)

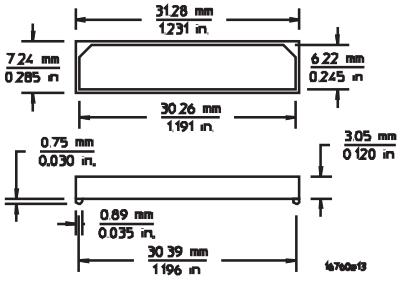

Figure 4.30. Dimensions of the 100-Pin Samtec connector used in the 16760-68702 and 16760-68703 connector kits.

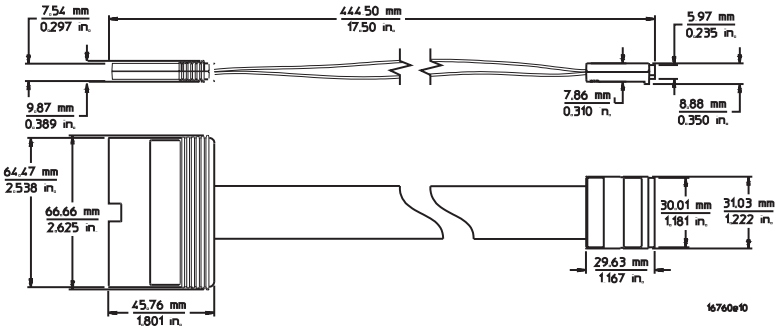

Figure 4.31. E5378A 100-pin single-ended probe dimensions.

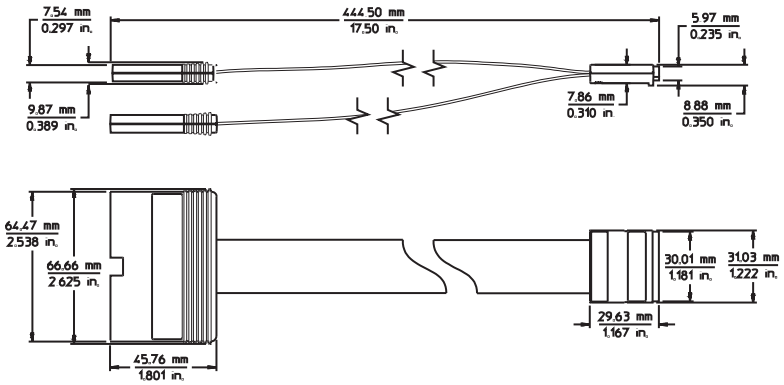

Figure 4.32. E5379A 100-pin differential probe dimensions.

Equivalent load

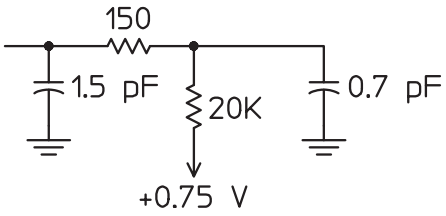

Figure 4.33. E5378A and E5379A input equivalent load, including 100-pin connector.

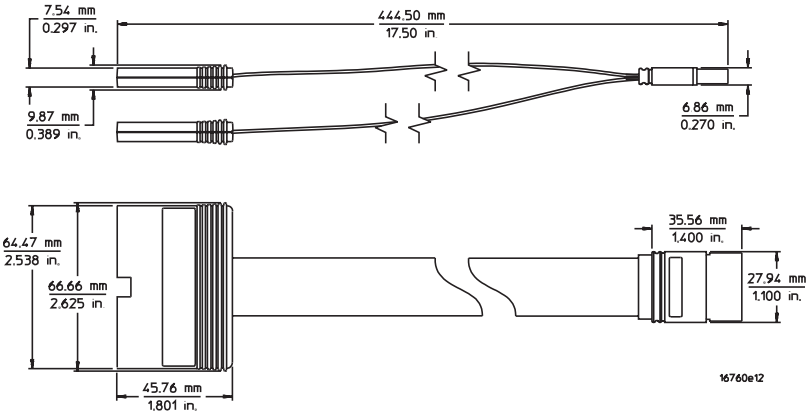

Figure 4.34. E5380B 38-Pin probe dimensions.

Equivalent load

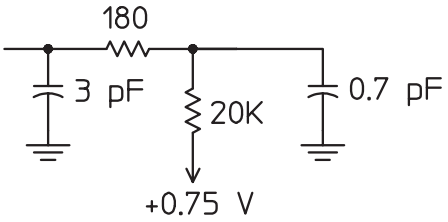

Figure 4.35. E5380B input equivalent load, including 38-pin connector.

Probing Solutions for 90-pin Logic Analyzers
High-Speed Timing Probing

E5386A half-channel adapter

When the Keysight high-speed timing analyzers are operating at their maximum speed, only the even numbered channels are used. To reduce the number of probes and connectors required, the E5386A adapter maps the even channels to all of the pins of an E5378A and E5379A Samtec probes, E5387A and E5390A Soft Touch Connectorless probes, and Soft Touch Pro Series connectorless probes E5404A, E5405B, and E5406A. The following diagrams show how the E5386A is connected.

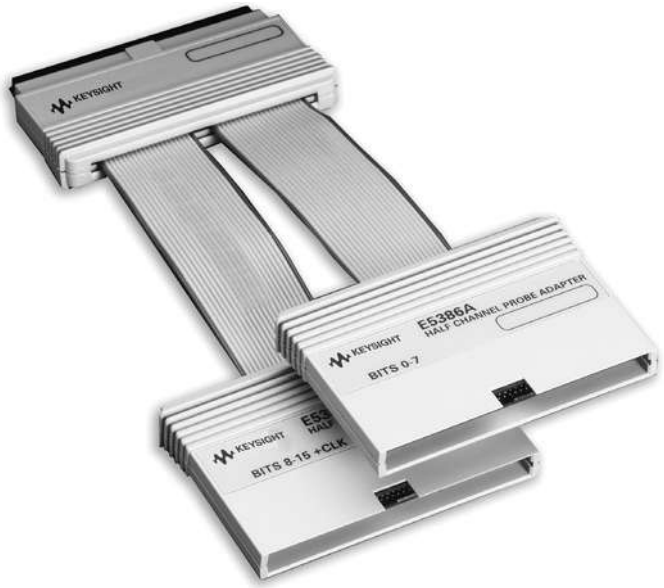

Figure 4.36. E5386A half-channel probe adapter.

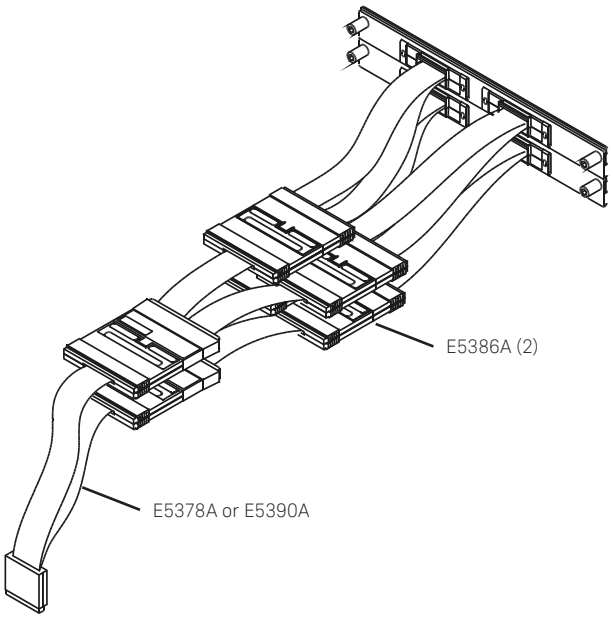

Figure 4.37. E5386A with E5378A, E5390A, or E5406A single-ended probe.

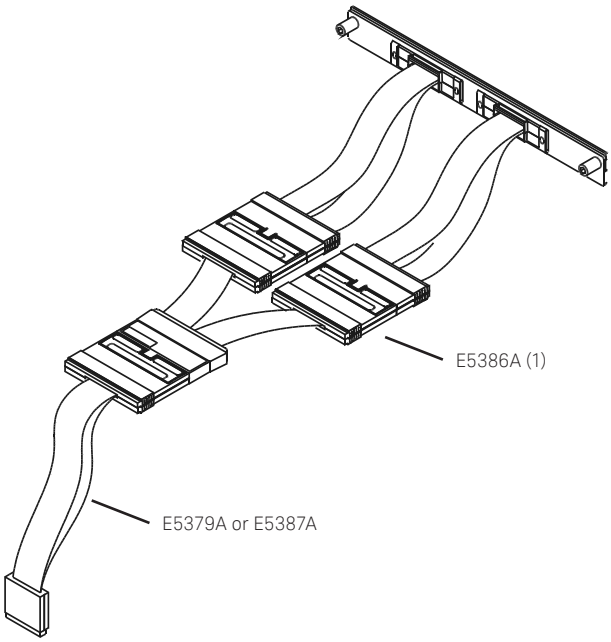

Figure 4.38. E5386A with E5379A, or E5405B differential probe.

For further information on the application of the E5386A Half-channel adaptor refer to Keysight E5400-Pro Series Soft Touch Connectorless Probes User's Guide, publication number E5404-97006.pdf

U4200A Series Probe/Cable Solutions for 160-pin Front Panel Connector Logic Analyzers

U4201A logic analyzer cable



Figure 5.1. U4201A logic analyzer cable.

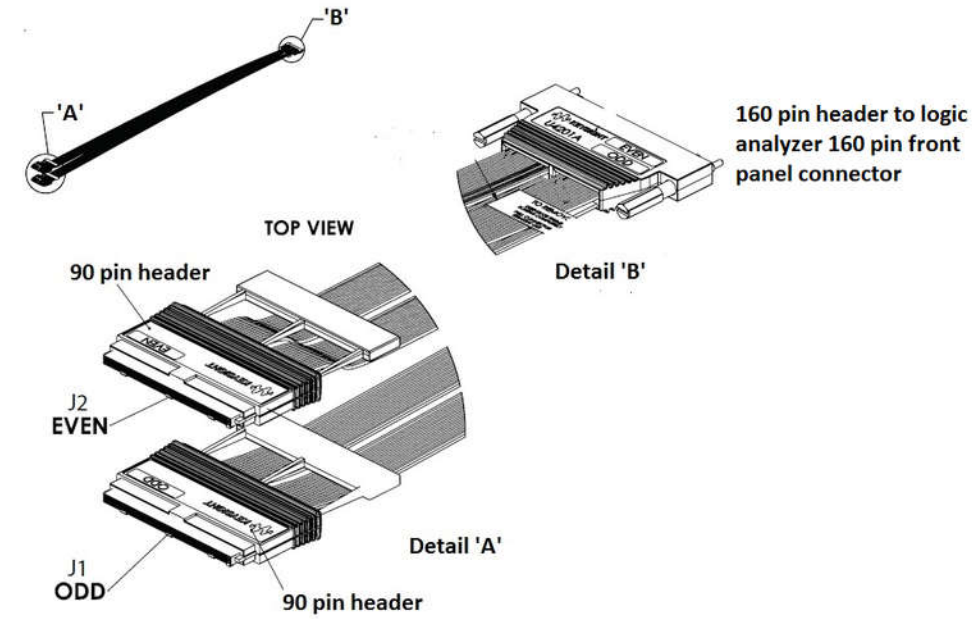

Figure 5.2. U4201A dimensions.

U4200A Series Probe/Cable Solutions for 160-pin Front Panel Connector Logic Analyzers (Continued)

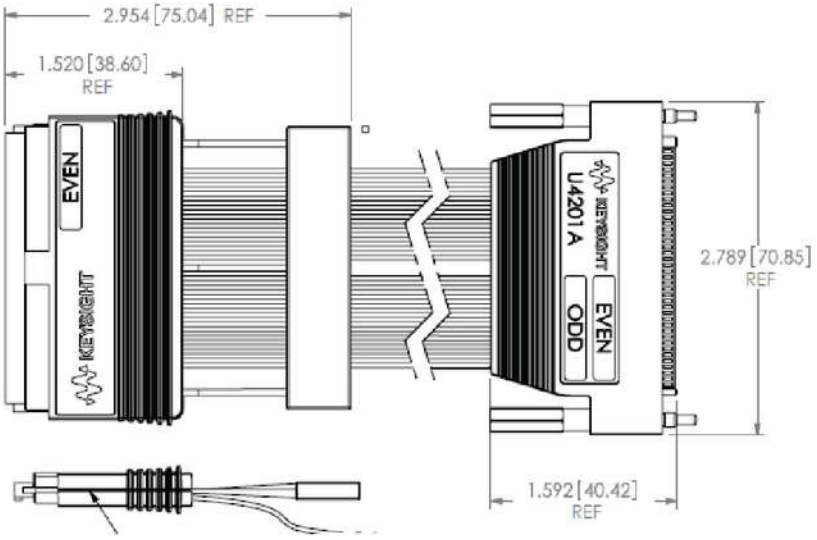

Side view 90 pin header

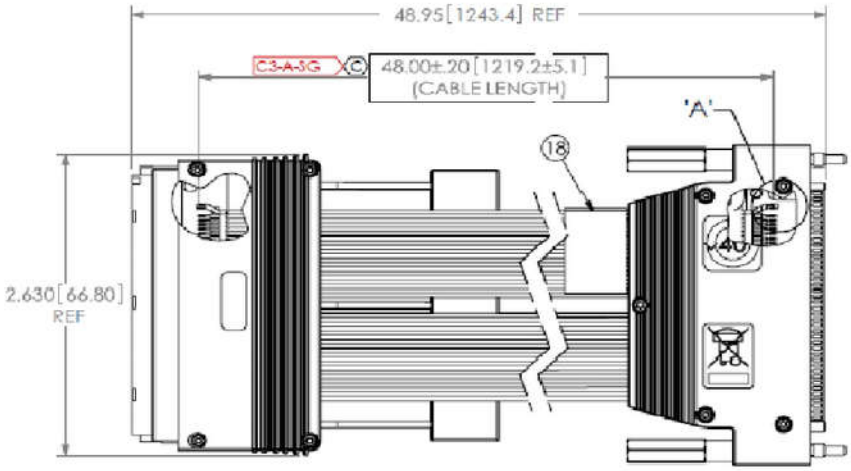

Figure 5.3.

U4206A Probe, 34 Channel, Soft Touch Pro, Single-Ended, to Four 160-pin Direct Connect to Logic Analyzer Front Panel Connectors

The U4206A is a direct connect probe/cable with a standard soft touch pro connector at one end that routes to four 160-pin connectors that plug into the front panel connectors of a U4164A logic analyzer module. The U4206A is designed to be used with either the quad state mode or ¼ channel 10 GHz timing mode of the U4164A logic analyzer module. For use in quad state mode only, the U4206A includes two flying leads to connect additional clock qualifier signals into the clock inputs on Pods 3 and 7. Please refer to the U4164A installation guide for specific details on the operation of the U4164A quad sample state or ¼ channel 10 GHz timing modes of operation.

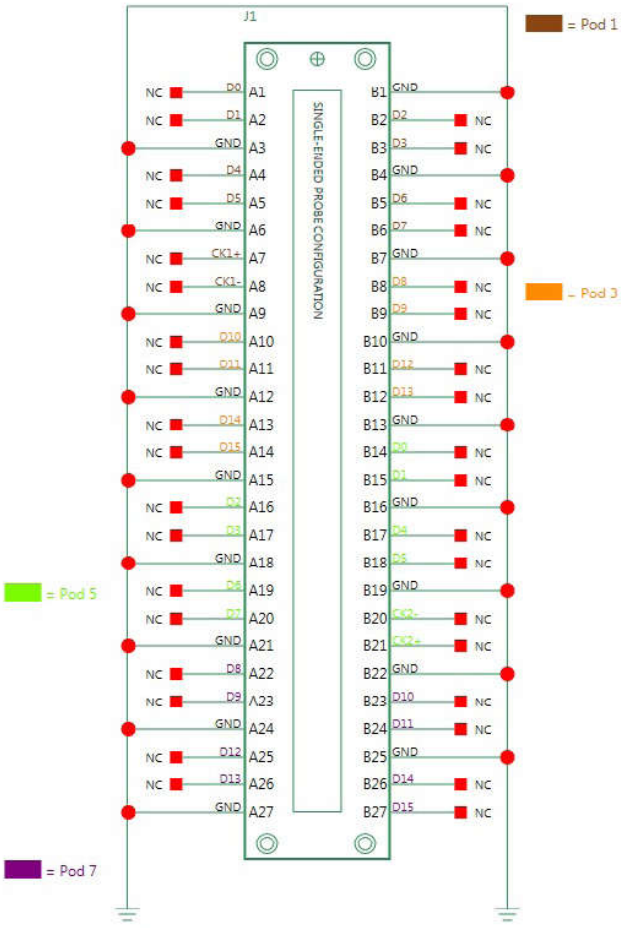

Figure 6.1. Soft touch pro foot print mapping to U4164A pod/ channel inputs using U4206A probe/cable.

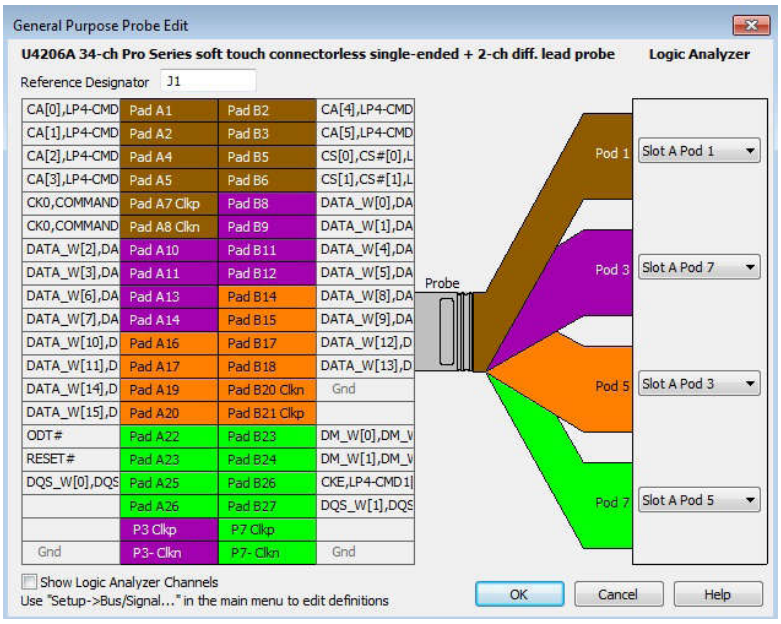

Figure 6.2. LPDDR4 example foot print mapping using U4206A Soft Touch Pro probe/cable into U4164A.

U4206A Probe, 34 Channel, Soft Touch Pro, Single-Ended, to Four 160-pin Direct Connect to Logic Analyzer Front Panel Connectors (Continued)

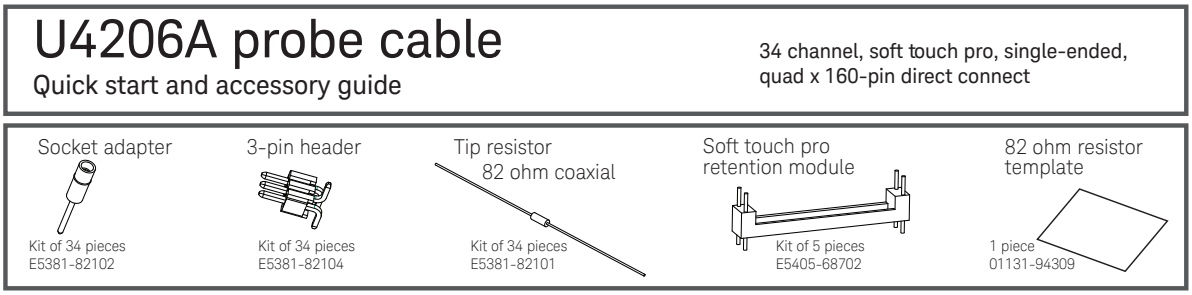

Figure 6.3. U4206A probe cable accessories.

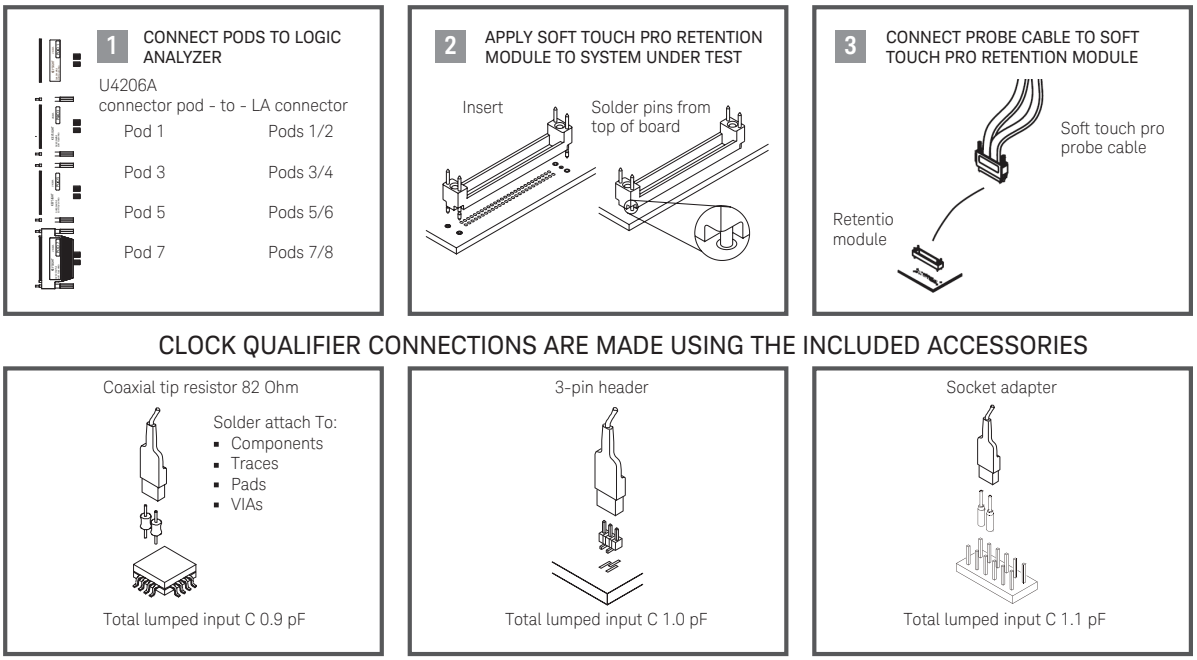

Figure 6.4. U4206A connections and probe cable details.

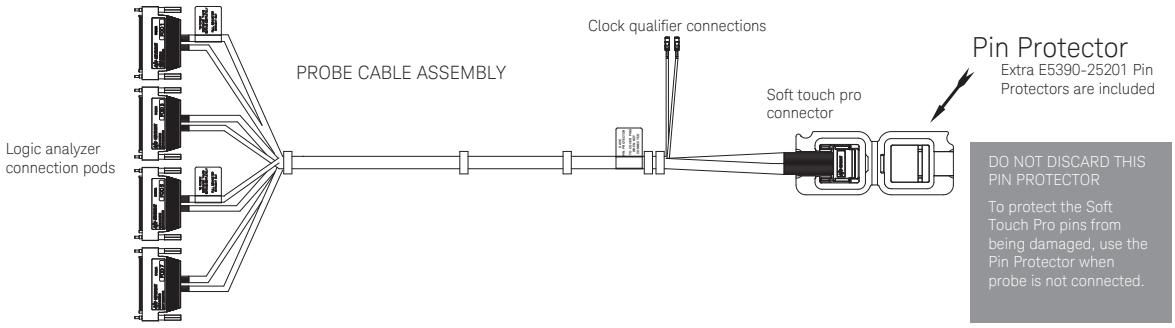

Figure 6.5. U4206A probe cable.

U4206A Probe, 34 Channel, Soft Touch Pro, Single-Ended, to Four 160-pin Direct Connect to Logic Analyzer Front Panel Connectors (Continued)

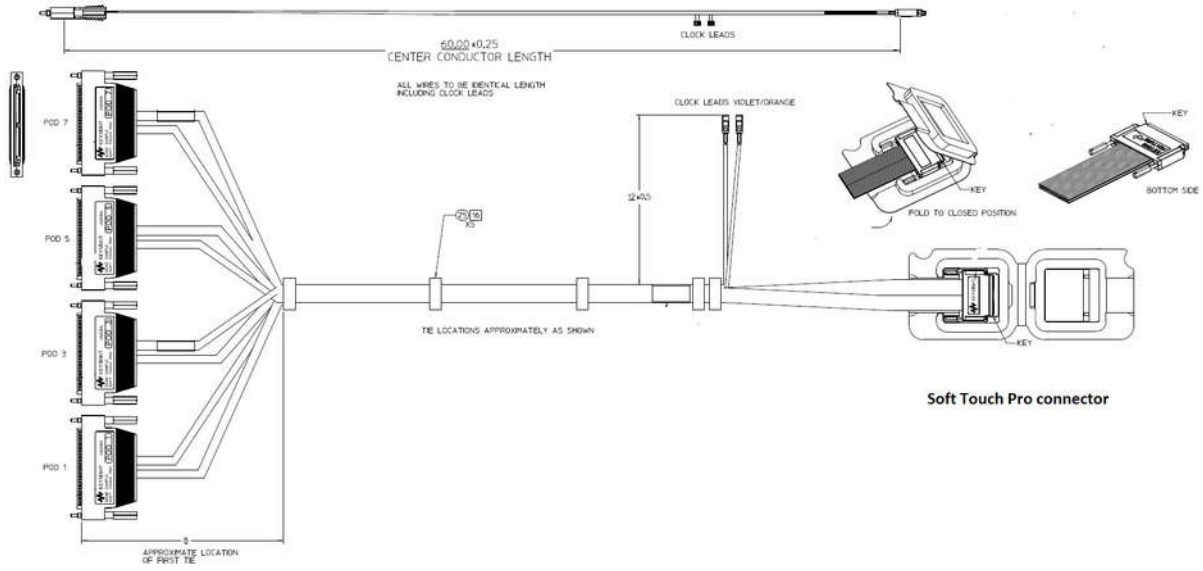

Figure 6.6. U4206A dimensions.

The U4206A ships with:

- Carrying case (qty 1)
- Socket adapters, one kit of qty 34, part number E5381-82102
- 3-pin headers, one kit of qty 34, part number E5381-82104
- Tip resistors 82 Ω coaxial, one kit of qty 34, part number E5381-82101
- Soft touch pro retention module, one kit of qty 5, part number E5405-68702
- 82 Ω resistor template (qty 1), part number 01131-94309
- Pin protector, one covering the soft touch pro connector on the U4206A and one spare, part number E5390-25201

U4207A Probe, Zero Ω, 34 Channel, Soft Touch Pro, Single-Ended, to Four 160-pin Direct Connect to Logic Analyzer Front Panel Connectors

The U4207A is only for use with Keysight RC (resistor/capacitor) BGA interposers, such as the W6602A. Please refer to the U4200A Series user guide for the specific Keysight RC BGA interposer for specific information regarding connecting the U4207A.

The Keysight W6602A+U4207A passively monitors the LPDDR4 200 ball DRAM package. After tuning the Keysight analyzer, Command/Address bits can be reliably captured up to 3200 MT/s. At some data rates, the analyzer may not be able to provide an error-free capture of all DQ data bits.

Physical dimensions of the U4207A are identical to the U4206A. Electrically, the probes are very different. The U4206A contains the RC tip network for the U4164A internally. The U4207A is zero Ω internally and is designed only to be used with Keysight BGA interposers with the tip RC network for the U4164A designed onto the BGA interposer.

CAUTION: Connecting the U4207A to a footprint without the RC tip network can damage the U4164A module.

The U4206A is designed to be used with either the quad state mode or ¼ channel 10 GHz timing mode of the U4164A logic analyzer module. For use in quad state mode only, the U4207A includes two flying leads to connect additional clock qualifier signals into the clock inputs on Pods 3 and 7 of the clocking module.

Please refer to the U4164A installation guide for specific details on the operation of the U4164A quad sample state or ¼ channel 10 GHz timing modes of operation.

The U4207A ships with:
- Carrying case (qty 1)
- Soft touch pro retention module, one kit of qty 5, part number E5405-68702
- Pin protector, one covering the soft touch pro connector on the U4206A and one spare, part number E5390-25201

U4200 Series Direct Connect Cables for use with 16850 Series Portable Logic Analyzers

The following U4200 Series direct connect cables are covered in the 16850 Series Portable Logic Analyzers - Data Sheet, publication number 5991-2791EN

- U4203A: Direct connect – flying lead (for more information, view the User Guide: **http://literature.cdn.keysight.com/litweb/pdf/U4203-97000.pdf?id=2498183**)
- U4204A: Direct connect – single-ended soft touch pro series
- U4205A: Direct connect – Mictor connector probe (for more information, view the User Guide: **http://literature.cdn.keysight.com/litweb/pdf/U4205-97000.pdf?id=2500912**)

General-Purpose Probing Flying Lead Probing Accessories

Wedge adapters

The Keysight Wedge technology provides very reliable probing of a few channels on 0.5 mm and 0.65 mm pitch QFPs. No clear area is required around the device. Each Wedge of the probe slides between the legs of the QFP. The side of each Wedge probe contacts the package legs. An insulation core electrically isolates the sides of each Wedge (see Figures 7.1 and 7.2). Various 3-signal, 8-signal, and 16-signal probes are available (see Table 5).

Table 5. Wedge probe adapter

IC leg spacing	Number of signals	Number of wedges in pack	Model number
0.5 mm	3	1	E2613A
0.5 mm	8	1	E2614A
0.5 mm	16	1	E2643A
0.65 mm	3	1	E2615A
0.65 mm	8	1	E2616A
0.65 mm	16	1	E2644A

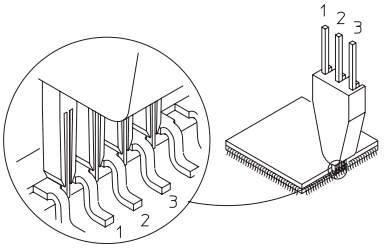

Figure 7.1. Three-signal Wedge electrical connection

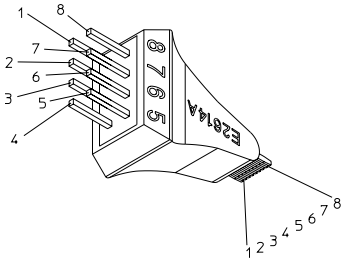

Top view of 16 signal pins

Bottom view of 16 ground pins (connected to common ground plane)

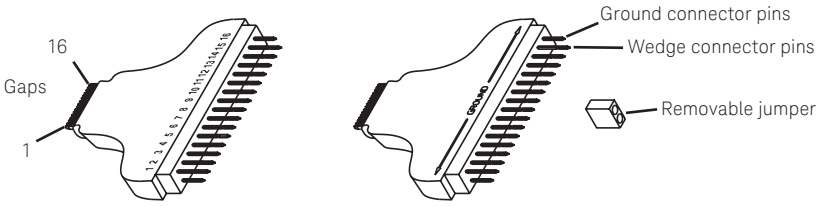

Figure 7.2. Eight-signal and 16-signal Wedge (16-signal Wedge has a common ground plane).

Miscellaneous probing accessories

The ferrite core assembly can be added to the probe cable to suppress EMI and RFI noise that can corrupt the measurement.

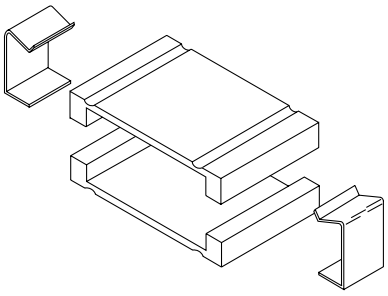

Figure 7.3. Ferrite core assembly, 16555-60001.

40-pin and 90-pin Logic Analyzers Probe Cables

Signal line loading

Any probed signal line must be able to supply a minimum of 600 mV (unless noted otherwise – see probe of interest) to the probe tip while the probe is connected to the system. The maximum input voltage of each probe is ± 40 volts peak (unless noted otherwise – see probe of interest).

Probe cables

The probe cable (see Figure 10.1 and Table 10) contains 16 signal lines and two clk lines, two +5 volt power lines, and ground lines for each of the signal/clock and power lines. All of these lines are contained in a 4.5-foot cable. The probe cable is included with the logic analyzer. The cable grounds are chassis (earth) grounds, not “floating” grounds. The two +5 volt power lines can be used to power active probing systems. Consult the specifications for the individual logic analyzers or logic analyzer cards for the maximum allowable current through each +5 volt power supply.

Caution: These +5 volt power lines MUST NOT be connected to the target’s power supply.

Caution: Be careful when using straight wire probe leads, one common ground, or RC networks located far from the target. These circumstances increase the impact of analog effects such as crosstalk and EMT susceptibility, which contribute to measurement errors.

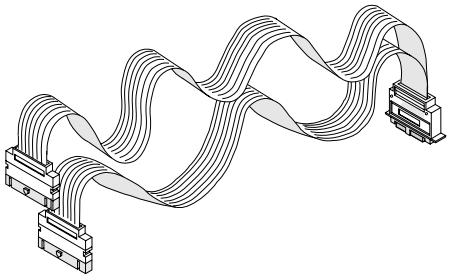

Figure 8.1. Typical logic analyzer probe cable.

40-pin and 90-pin Logic Analyzers Probe Cables (Continued)

Table 6. Logic analyzer cables

	40-pin cable part number						90-pin cable part number		
Logic analyzer	**01550-61607**	**16550-61601**	**01660-61605**	**16555-61606**	**16710-61603**	**16715-61601**	**16760-61605**	**16962-61601**	**U4201A**
U4164A									●
U4154A/B									●
16850 Series									●
16962A								●	
16951B							●		
16950A/B							●		
16911A						●			
16910A						●			
16800 Series						●			
16760A							●		
16753/54/ 55/56A							●		
16752A/B						●			
16751A/B						●			
16750A/B						●			
16740 Series						●			
16719A						●			
16718A						●			
16717A						●			
16716A						●			
16715A						●			
16712A					●				
16711A					●				
16710A					●				
16557D					●				
16556A/D				●					
16555A/D				●					
16554A				●					
16550A			●						
1690 Series						●			
1680 Series						●			
1670 Series					●				
1660 Series		●							
1650 Series	●								

1. You must purchase U4201A logic analyzer cables and 90-pin probes and/or purchase direct-connect probes for these logic analyzers.

Probing Solutions for 40-pin Logic Analyzers
General-Purpose Probing

E5383A 17-channel single-ended flying lead probe

Ideal when only a few lines may need to be probed or probe points are distributed across a target. The E5383A includes a set of 20 IC test clips and five ground leads.

Logic analysis general-purpose probes

General-purpose probing requires connecting probe leads to individual signal lines. This method is most convenient for a small to moderate number of signals, is very flexible, and can be used in conjunction with other probing methods.

Note: Any probed signal line must be able to supply a minimum of 600 mV to the probe with the specified loading.

The standard probing system

The standard probing system consists of IC clips, probe leads, probe housing and probe cable. Because it is passive, the standard probing system is smaller, lighter, and much easier to use than active probing systems. This passive probing system is similar to a probing system used on a high frequency oscilloscope. It consists of an isolation network (as shown in Figure 9.1) at the probe tip and a shielded resistive transmission line. The advantages of this system are:

- High input impedance. See Figure 9.1.
- Signal ground at the probe tip for high-speed signals.
- Inexpensive, removable probe tip assemblies.

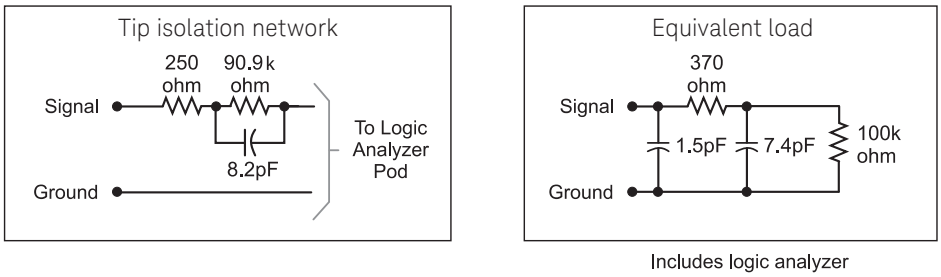

Figure 9.1. Probe tip Isolation network and equivalent load.

Probing Solutions for 40-pin Logic Analyzers
General-Purpose Probing (Continued)

Probe leads and lead sets

Probe leads are configured into lead sets, which can probe 16 data channels with ground, one clock channel, and a common ground. A 17-channel probe lead set (E5383A) is shown in Figure 9.2, along with the replacement part numbers for individual components in Figure 9.3.

Each probe lead is a 12-inch, twisted-pair cable connected to the probe cable at the probe housing (see Figure 9.3). The probe tip includes a signal lead, a connector for a ground lead, and the isolation network.

The signal and ground leads can be connected directly to the target system. This requires installing 0.63 mm (0.025 inch) square pins, or round pins with a diameter of between 0.66 mm (0.026 inch) and 0.84 mm (0.033 inch) directly on the board. An IC test clip can also be used. The same specifications apply for the pin dimensions of the test clip. (See Figure 9.6 for IC test clips available from commercial sources.)

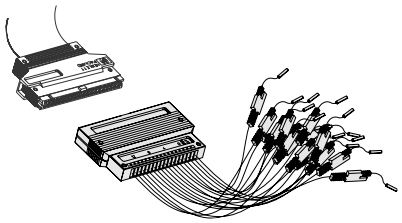

Figure 9.2. E5383A 17-channel probe lead set.

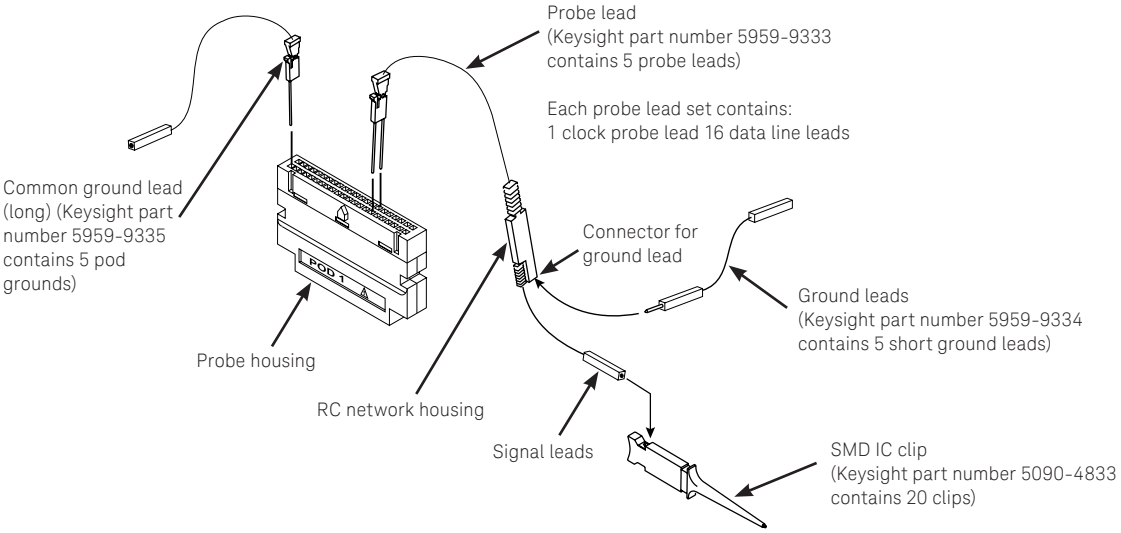

Figure 9.3. E5383A 17-channel probe lead set replacement parts.

Probing Solutions for 40-pin Logic Analyzers
General-Purpose Probing (Continued)

IC clips

The surface-mount device IC clip with twin hooks (part number 5090-4833, containing 20 IC clips) is designed for fine surface-mounted component leads. The twin hook 0.5 mm IC clip (part number 10467-68701, containing four 0.5 mm IC clips), is very useful for 0.5 mm pitch components. See Figure 9.5.

Grounding

There are three methods of grounding the probe system. First, the entire probe lead set can be grounded through the common ground. This requires only one connection, but is not recommended because it will cause poor signal fidelity in systems with fast transition times. The recommended method is to individually ground each probe lead. This yields optimal signal fidelity and is required for signals with faster transition times (< 4 to 5 ns).

For moderate rise times (greater than 2 ns), it may be acceptable to ground every other (or every fourth) ground connection to the target.

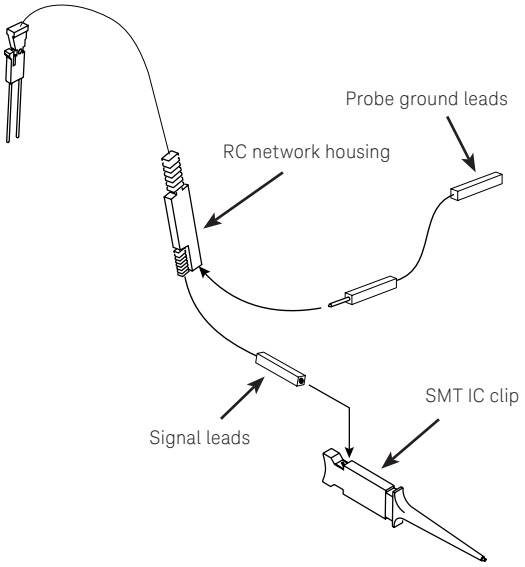

Figure 9.4. Connecting IC clips and ground leads to probes.

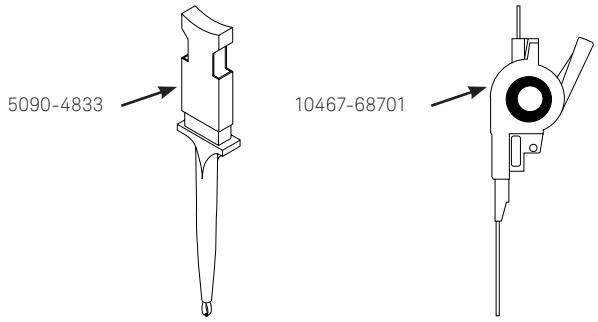

Figure 9.5. SMD IC clip and 0.5 mm IC clip.

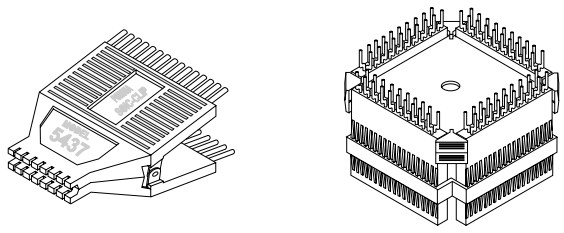

Figure 9.6. Typical IC test clips available from commercial test clip vendors.

Probing Solutions for 40-pin Logic Analyzers
Designing for Logic Analysis Probing

Keysight recommends that targets with probing constraints have connectors designed into the prototype versions of the product for effective hardware and software debug. The following should be considered when designing with connectors:

- Select the appropriate connector technology for your target speed and target density.
- Carefully select all lines for routing to the connectors that may be needed for debug.
- Group the lines at each connector for your probing convenience. For example, Keysight may have written an inverse assembler for your device that has a preconfigured signal order. Before designing, refer to the documentation for this inverse assembler for essential signal lines and order.
- Keep the routing to connectors as short as possible to minimize target impact and provide accurate data.
- Examine the impact of probing isolation networks designed into the target versus the isolation network products offered by Keysight.

An isolation network must be located between the target and the logic analyzer. It can be located on the target board in through-hole or SMT parts. It can also be attached to the logic analyzer cable with the probe leads (the isolation network is molded into the end of the probe); or the Keysight 01650-63203 isolation adapter with self contained isolation networks can be used. Probe leads can be used with connectors but are not the most convenient method. Direct connection of the connectors with the analyzer cable (isolation network parts on the target) or with a probe or isolation adapter is the faster, more convenient method.

Probing Solutions for 40-pin Logic Analyzers
Soft Touch Connectorless Probing

High-density, high-performance probes

Keysight Pro Series soft touch connectorless logic analyzer probes

Keysight has developed connectorless logic analyzer probes based on soft touch probing technology. Connectorless logic analyzer probing removes the connector that is traditionally attached to the target board and replaces it with an array of probe pads. This reduces the probe load on the target by eliminating the loading associated with the physical body of the connector. Additionally, this streamlines the design flow by eliminating the need to assign a logic analyzer connector to the bill of material of your board, procuring those connectors and then having them loaded onto your board.

Keysight's soft touch connectorless probes use micro spring-pin technology to provide reliable contact which is not dependent on the planarity of the PC board or the plating processes used to fabricate the board. No special cleaning processes are required when using Keysight's soft touch probes.

The new Keysight Pro Series soft touch connectorless probes offer a 30% smaller footprint than the original soft touch probes and are the basis for the industry standard connectorless probing footprint.

The probes use a retention module that ensures soft touch pin-to-PC board pad alignment and holds the probe in place while in use. The Pro Series soft touch uses a "top-side" mountable retention module. The retention module is mounted on the same side of the board as the probing footprint so there is no need to access the back-side of the board. Because there is no requirement for the retention module pins to extend beyond the back-side of the board, the retention module is compatible with virtually any board thickness.

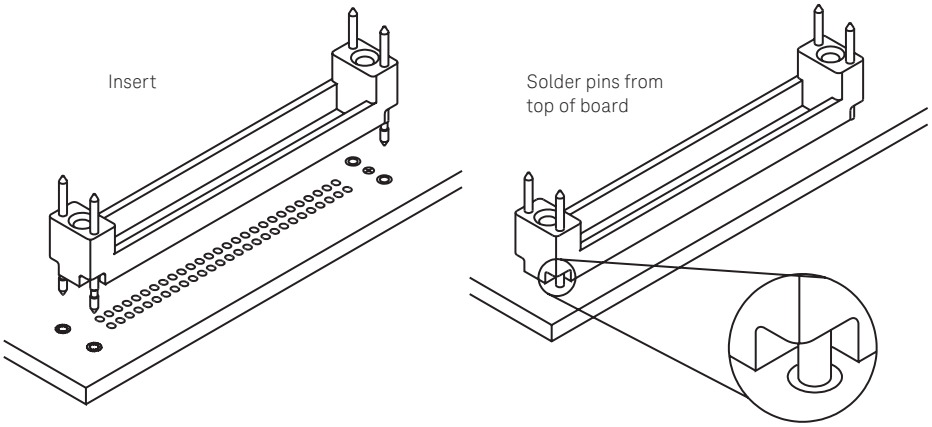

Figure 9.7. "Top-side" mountable retention module.

E5404A Pro Series soft touch connectorless probe

The E5404A is a 34-channel single-ended Pro Series soft touch connectorless probe compatible with all Keysight logic analyzers that have a 40-pin pod connector. It is capable of acquiring data at the maximum rates of the logic analyzer it is connected to.

Features

- No connector on the target board
- Top-side mount retention module
- Industry-standard connectorless footprint
- 34 channels, single-ended clock and data
- Extremely low, < 0.7 pF, equivalent load capacitance
- Capable of data rates > 2.5 Gb/s (maximum rate dependent on analyzer used)
- 500 mV p-p minimum signal amplitude
- Robust and reliable soft touch technology

Unused clock inputs can be used as data inputs.

The E5404A (used with logic analyzers with a 40-pin cable connector) uses the same footprint, pinout, and retention module as the E5406A Pro Series soft touch connectorless probe (used with logic analyzers with a 90-pin cable connector).

A kit of five retention modules is shipped with each Pro Series soft touch probe. Additional kits can be ordered using Keysight part number E5403A.

Probing Solutions for 40-pin Logic Analyzers
Soft Touch Connectorless Probing (Continued)

E5394A soft touch connectorless probe

The E5394A is a 34-channel single-ended soft touch connectorless probe compatible with all Keysight logic analyzers that have a 40-pin pod connector. It is capable of acquiring data at the maximum rates of the logic analyzer it is connected to. The probe has the following inputs:

- 32 single-ended data inputs
- Two single-ended clock inputs
- < 0.7 pf input capacitance
- 500 mV p-p minimum signal amplitude

Unused clock inputs can be used as data inputs.

The E5394A (used with logic analyzers with a 40-pin pod connector) uses the same footprint, pinout and retention module as the E5390A single-ended soft touch connectorless probe (used with logic analyzers with a 90-pin pod connector).

A kit of five retention modules is shipped with each soft touch probe. Additional kits can be ordered using Keysight part number E5387-68701.

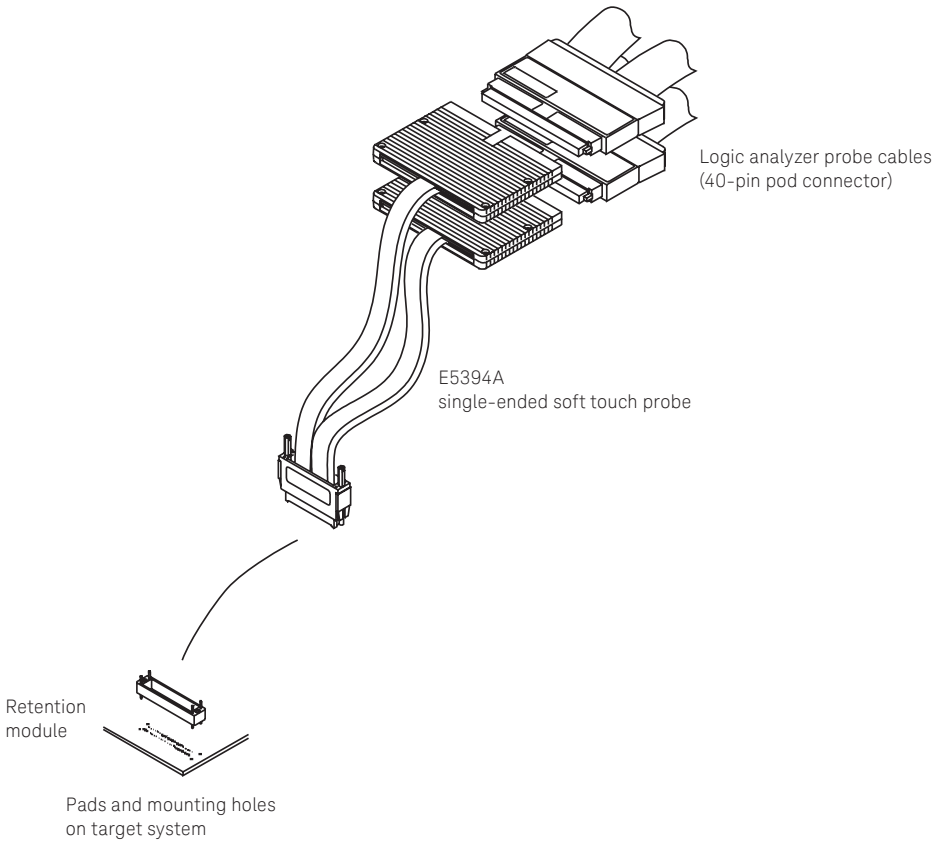

Figure 9.8. Keysight E5394A soft touch probe connection.

E5396A half-size soft touch connectorless probe

The E5396A is a small space saving probe compatible with all Keysight logic analyzers that have a 40-pin cable connector. It is a 17-channel, single-ended probe capable of capturing data at the maximum rates of the logic analyzer it is connected to. The probe has the following inputs:

- 16 single-ended data inputs
- One single-ended clock input
- < 0.7 pf equivalent load capacitance
- 500 mV p-p minimum signal amplitude

The unused clock input can be used as a data input.

The E5396A (used with logic analyzers with a 40-pin cable connector) uses the same footprint, pinout, and retention module as the E5398A single-ended soft touch connectorless probe (used with logic analyzers with a 90-pin cable connector).

Probing Solutions for 40-pin Logic Analyzers
Soft Touch Connectorless Probing (Continued)

Probe dimensions

The following figures show dimensions, footprint, and pinout information you will need to design your target system board for use with the Keysight Pro Series soft touch probes.

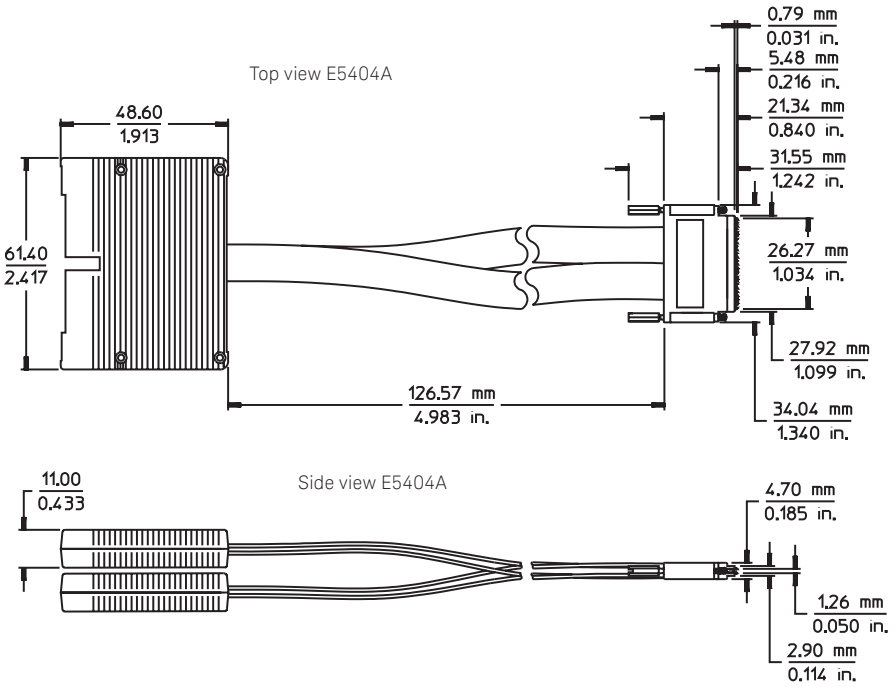

Figure 9.9. E5404A probe dimensions.

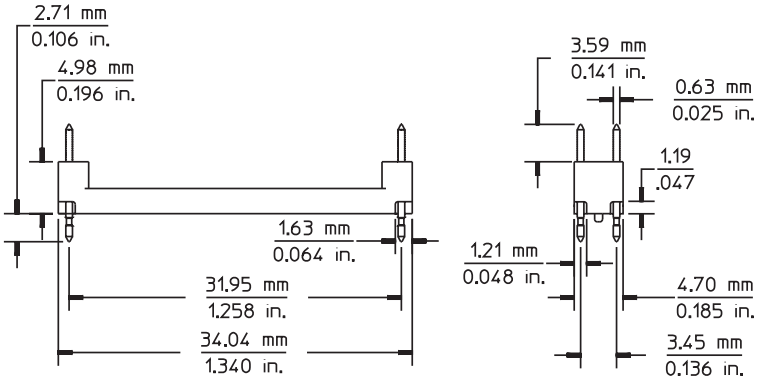

Figure 9.10. Pro Series soft touch retention module dimensions.

Probe and retention module dimensions

The following dimensions show the Pro Series soft touch probe attached to the retention module. The retention module is mounted on the PC board.

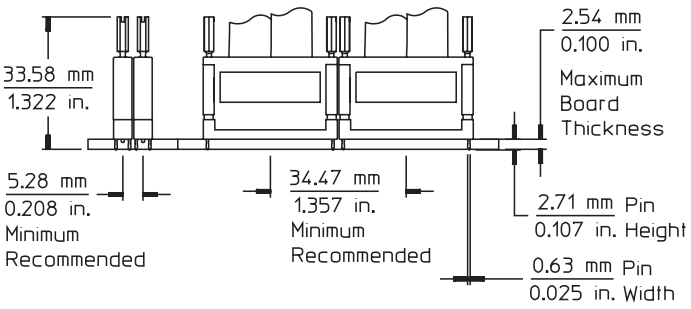

Figure 9.11. Pro Series soft touch side-by-side dimensions.

Probing Solutions for 40-pin Logic Analyzers
Soft Touch Connectorless Probing (Continued)

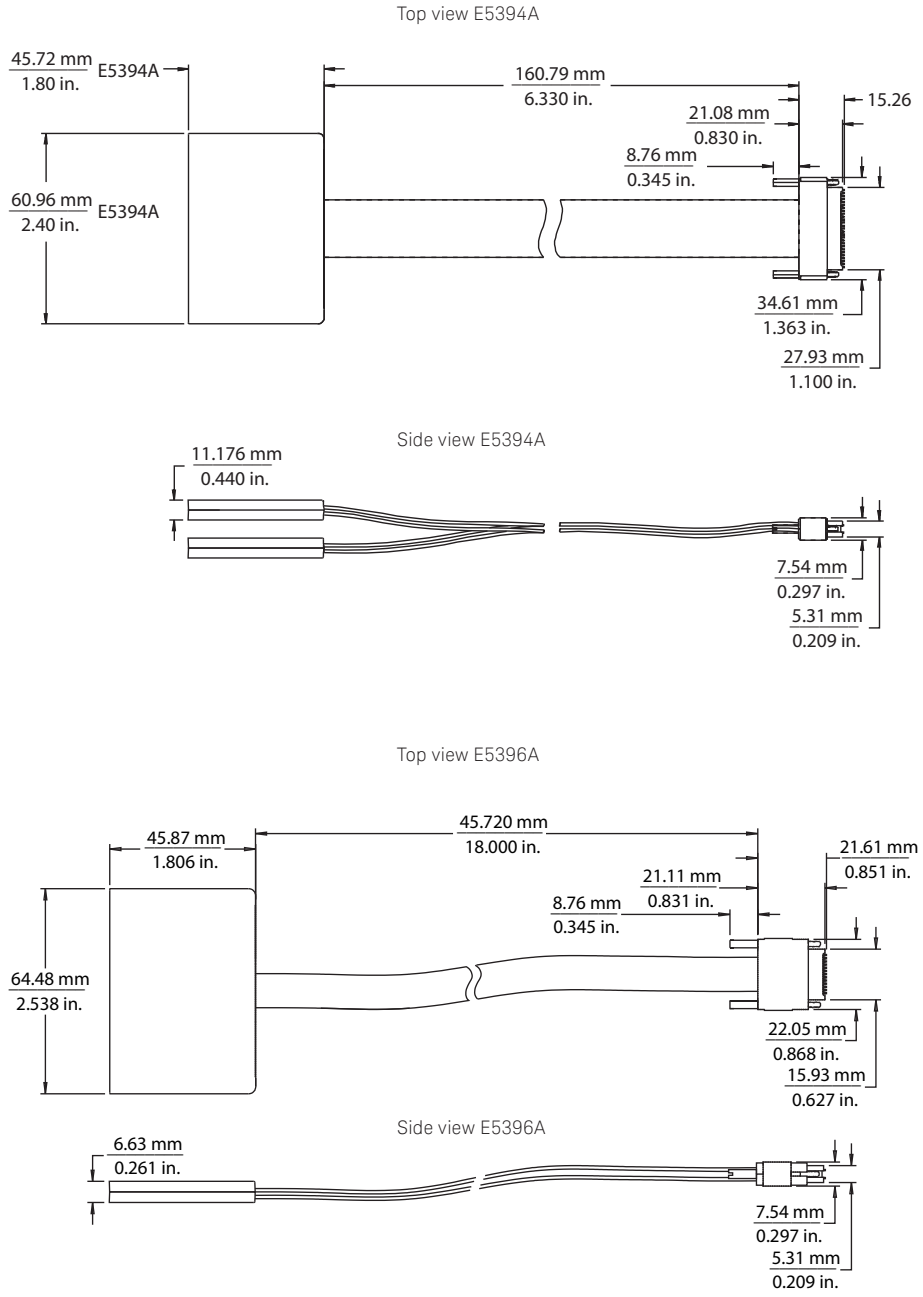

Figure 9.12. E5394A and E5396A soft touch probe dimensions.

Probing Solutions for 40-pin Logic Analyzers
Soft Touch Connectorless Probing (Continued)

Retention module dimensions

The soft touch probes are attached to the PC board using a retention module which ensures pin-to-pad alignment and holds the probe in place. A board thickness of up to 2.54 mm (0.100 inch) is recommended. Insert the retention module into the board, noting the keying pin, and solder the four alignment pins to the backside of the board.

34-channel retention module dimensions

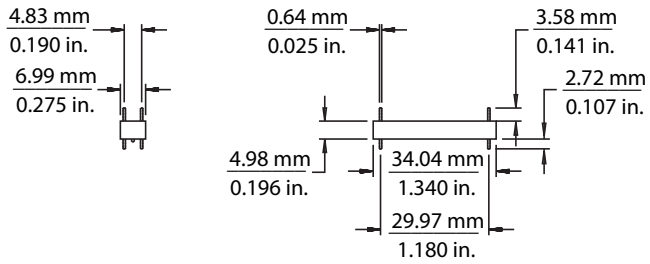

17-channel retention module dimensions

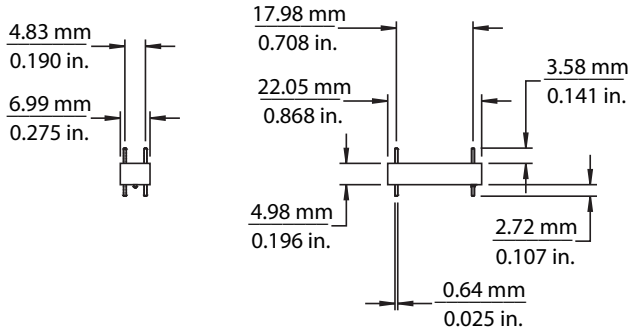

Figure 9.13. Retention module dimensions.

Probe and retention module dimensions

The following dimensions show the soft touch probe attached to the retention module. The retention module is mounted on the PC board.

34-channel probe and retention module dimensions

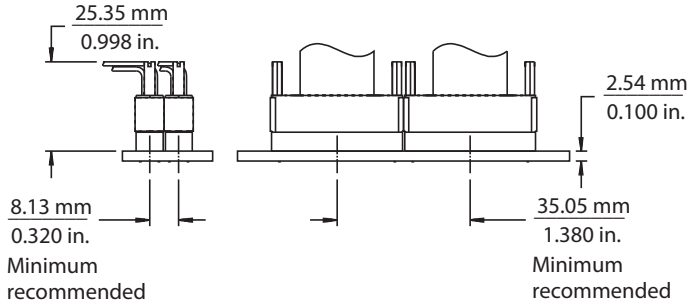

17-channel probe and retention module dimensions

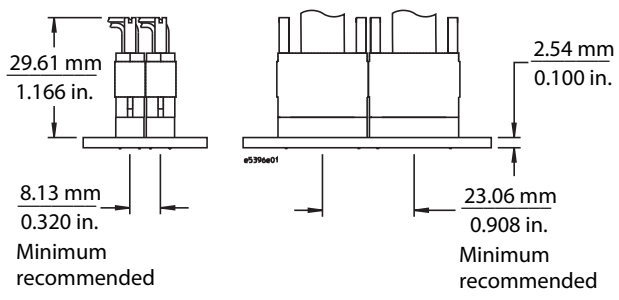

Figure 9.14. Side-by-side dimensions.

Probing Solutions for 40-pin Logic Analyzers
Soft Touch Connectorless Probing (Continued)

Drawing notes:

1. Maintain a solder mask web between pads when traces are routed between the pads on the same layer. The solder mask may not encroach onto the pads within the pad dimension shown.
2. VIAs not allowed on these pads. VIA edges may be tangent to pad edges as long as a solder mask web between VIAs and pads is maintained.



3. Surface finishes on pads should be HASL immersion silver, or gold over nickel.
4. This footprint is compatible with retention module Keysight part number E5405-68702.
5. This through hole is not used with the Keysight retention module.
6. Plated through hole should not be tied to ground plane for thermal relief.

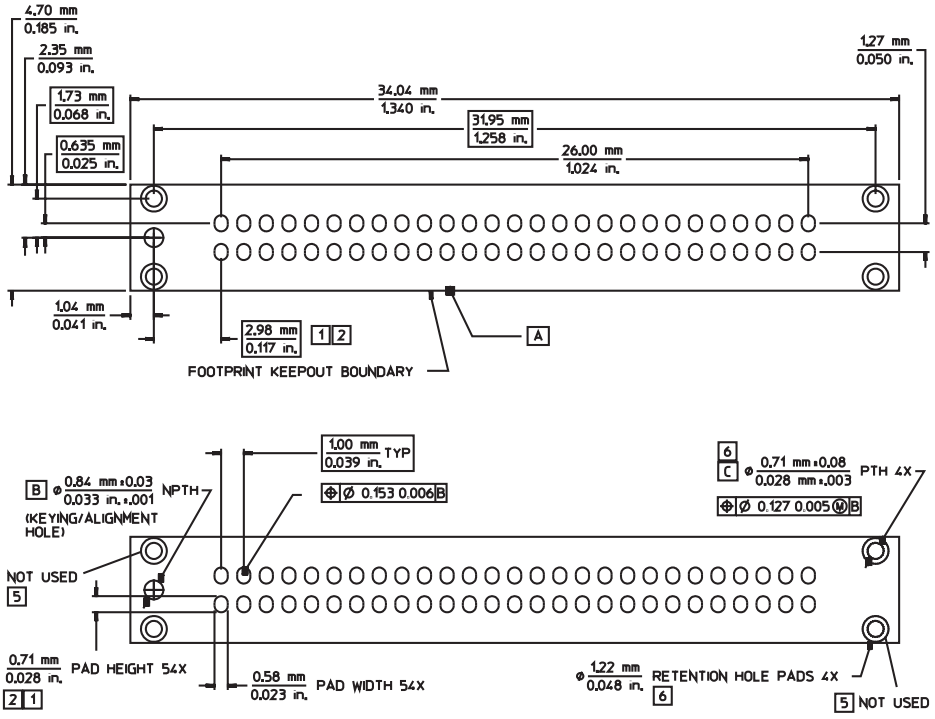

Figure 9.15. Pro Series soft touch footprint dimensions (see drawing notes).

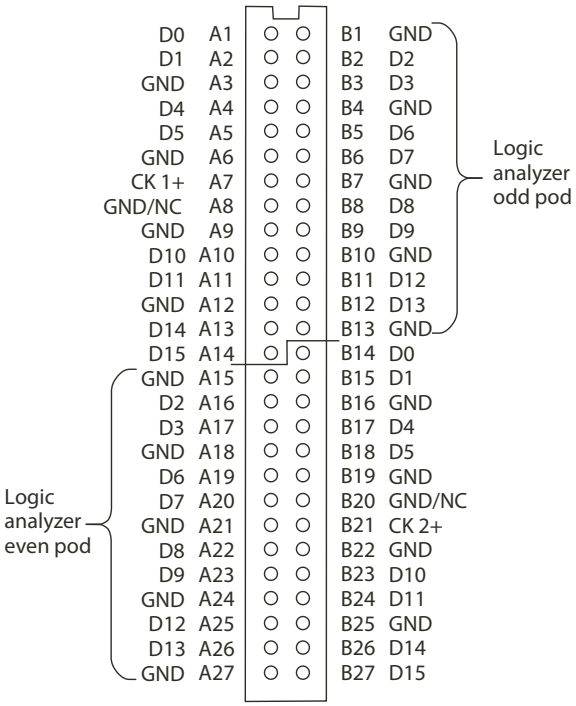

Figure 9.16. Pad numbers for E5404/06A 34-channel single-ended probes.

Probing Solutions for 40-pin Logic Analyzers
Soft Touch Connectorless Probing (Continued)

E5404/06A 34-channel single-ended probe			Logic analyzer	
Signal name	**Pad #**		**Channel**	**Pod**
D0	A1	→	0	Whichever pod is connected to “Odd” on the E5404/06A probe
D1	A2	→	1	
Ground	A3			
D4	A4	→	4	
D5	A5	→	5	
Ground	A6			
Clock 1+	A7	→	Clock	
GND/NC/Clock 1–	A8			
Ground	A9			
D10	A10	→	10	
D11	A11	→	11	
Ground	A12			
D14	A13	→	14	
D15	A14	→	15	
Ground	A15			Whichever pod is connected to “Even” on the E5404/06A probe
D2	A16	→	2	
D3	A17	→	3	
Ground	A18			
D6	A19	→	6	
D7	A20	→	7	
Ground	A21			
D8	A22	→	8	
D9	A23	→	9	
Ground	A24			
D12	A25	→	12	
D13	A26	→	13	
Ground	A27			

E5404/06A 34-channel single-ended probe			Logic analyzer	
Signal name	**Pad #**		**Channel**	**Pod**
Ground	B1			Whichever pod is connected to “Odd” on the E5404/06A probe
D2	B2	→	2	
D3	B3	→	3	
Ground	B4			
D6	B5	→	6	
D7	B6	→	7	
Ground	B7			
D8	B8	→	8	
D9	B9	→	9	
Ground	B10			
D12	B11	→	12	
D13	B12	→	13	
Ground	B13			
D0	B14	→	0	Whichever pod is connected to “Even” on the E5404/06A probe
D1	B15	→	1	
Ground	B16			
D4	B17	→	4	
D5	B18	→	5	
Ground	B19			
GND/NC/Clock 2–	B20			
Clock 2+	B21	→	Clock	
Ground	B22			
D10	B23	→	10	
D11	B24	→	11	
Ground	B25			
D14	B26	→	14	
D15	B27	→	15	

Probing Solutions for 40-pin Logic Analyzers
Soft Touch Connectorless Probing (Continued)

Probe footprint dimensions

Use these probe footprint dimensions for the PC board pads and holes for attaching the retention module.

Soft touch

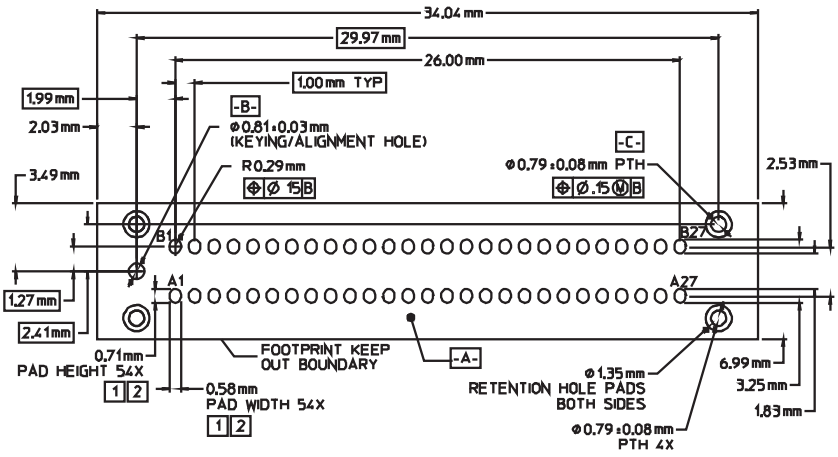

NOTES:

1. MUST MAINTAIN A SOLDER MASK WEB BETWEEN PADS WHEN TRACES ARE ROUTED BETWEEN THE PADS ON THE SAME LAYER. SOLDERMASK MAY NOT ENCROACH ONTO THE PADS WITHIN THE PAD DIMENSION SHOWN.
2. VIA IN PAD NOT ALLOWED ON THESE PADS. VIA EDGES MAY BE TANGENT TO PAD EDGES AS LONG AS A SOLDER MASK WEB BETWEEN VIAS AND PADS IS MAINTAINED.
3. PERMISSABLE SURFACE FINISHES ON PADS ARE HASL, IMMERSION SILVER, OR GOLD OVER NICKEL.
4. FOOTPRINT IS COMPATIBLE WITH RETENTION MODULE. AGILENT PART #E5387-68702.
5. RETENTION MODULE DIMENSIONS ARE 34.04 mm x 7.01 mm x 4.98 mm TALL RELATIVE TO THE TOP SURFACE OF THE PDB. RETENTION PINS EXTEND 4.32 mm BEYOND THE BOTTOM SURFACE OF THE RM THROUGH THE PCB.
6. ASSUME NORMAL ARTWORK TOLERANCES FOR PAD SIZE DIMENSIONS

e5387a03

Half-size soft touch

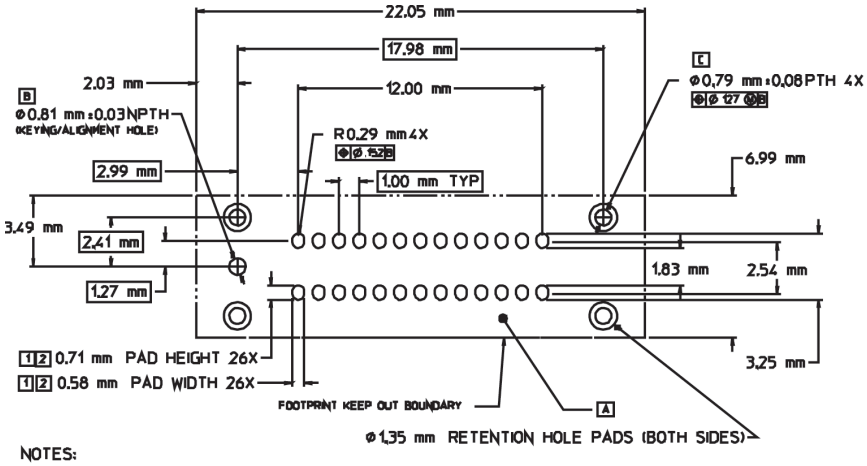

NOTES:

1. MUST MAINTAIN A SOLDER MASK WEB BETWEEN PADS WHEN TRACES ARE ROUTED BETWEEN THE PADS ON THE SAME LAYER. SOLDERMASK MAY NOT ENCROACH ONTO THE PADS WITHIN THE PAD DIMENSION SHOWN.
2. VIA IN PAD NOT ALLOWED ON THESE PADS. VIA EDGES MAY BE TANGENT TO PAD EDGES AS LONG AS A SOLDER MASK WEB BETWEEN VIAS AND PADS IS MAINTAINED.
3. PERMISSABLE SURFACE FINISHES ON PADS ARE HASL, IMMERSION SILVER, OR GOLD OVER NICKEL.
4. FOOTPRINT IS COMPATIBLE WITH RETENTION MODULE. AGILENT PART NUMBER E5396-68702.
5. RETENTION MODULE DIMENSIONS ARE 020.04 mm x 6.99 mm x 4.95 mm TALL RELATIVE TO THE TOP TOP SURFACE OF THE PCB. RETENTION PINS EXTEND 27.18 mm BEYOND THE BOTTOM SURFACE OF THE RM THROUGH THE PCB.

Figure 9.17. Footprint dimensions.

Probing Solutions for 40-pin Logic Analyzers
Soft Touch Connectorless Probing (Continued)

Pinout for the E5394A single-ended soft touch probe

The following graphic and table show the E5394A single-ended soft touch probe pad numbers and logic analyzer pod inputs.

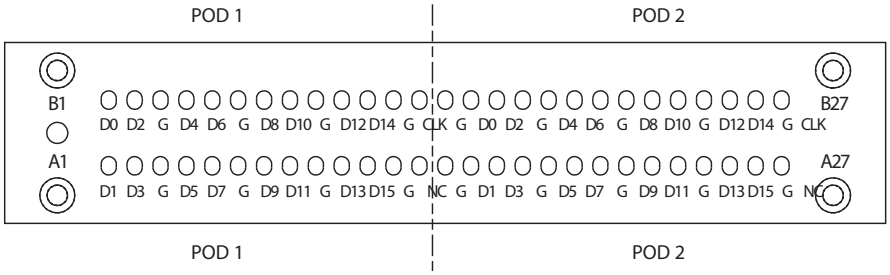

Figure 9.18. Pinout.

E5394A single-ended probe			Logic analyzer	
Signal name	**Pad #**		**Channel**	**Pod**
D1	A1	→	1	Whichever pod is connected to “Odd” on the E5394A probe
D3	A2	→	3	
Ground	A3			
D5	A4	→	5	
D7	A5	→	7	
Ground	A6			
D9	A7	→	9	
D11	A8	→	11	
Ground	A9			
D13	A10	→	13	
D15	A11	→	15	
Ground	A12			
NC	A13	→	NC	
Ground	A14			Whichever pod is connected to “Even” on the E5394A probe
D1	A15	→	1	
D3	A16	→	3	
Ground	A17			
D5	A18	→	5	
D7	A19	→	7	
Ground	A20			
D9	A21	→	9	
D11	A22	→	11	
Ground	A23			
D13	A24	→	13	
D15	A25	→	15	
Ground	A26			
NC	A27	→	NC	

E5394A single-ended probe			Logic analyzer	
Signal name	**Pad #**		**Channel**	**Pod**
D0	B1	→	0	Whichever pod is connected to “Odd” on the E5394A probe
D2	B2	→	2	
Ground	B3			
D4	B4	→	4	
D6	B5	→	6	
Ground	B6			
D8	B7	→	8	
D10	B8	→	10	
Ground	B9			
D12	B10	→	12	
D14	B11	→	14	
Ground	B12			
Clock	B13	→	Clock	
Ground	B14			Whichever pod is connected to “Even” on the E5394A probe
D0	B15	→	0	
D2	B16	→	2	
Ground	B17			
D4	B18	→	4	
D6	B19	→	6	
Ground	B20			
D8	B21	→	8	
D10	B22	→	10	
Ground	B23			
D12	B24	→	12	
D14	B25	→	14	
Ground	B26			
Clock	B27	→	Clock	

Probing Solutions for 40-pin Logic Analyzers
Soft Touch Connectorless Probing (Continued)

Pinout for the E5396A 17-channel single-ended soft touch probe

The following graphic and table show the E5396A single-ended soft touch probe pad numbers and logic analyzer pod inputs.

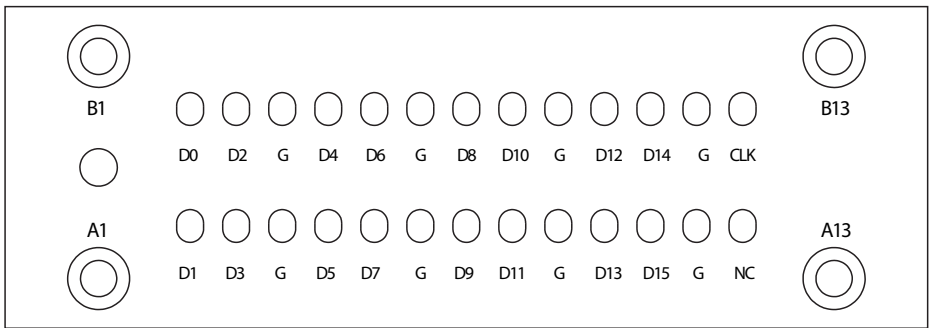

Figure 9.19. Pinout.

E5396A 17-channel single-ended probe			Logic analyzer	
Signal name	**Pad #**		**Channel**	**Pod**
D1	A1	→	1	Whichever pod is plugged into the E5396A probe
D3	A2	→	3	
Ground	A3			
D5	A4	→	5	
D7	A5	→	7	
Ground	A6			
D9	A7	→	9	
D11	A8	→	11	
Ground	A9			
D13	A10	→	13	
D15	A11	→	15	
Ground	A12			
NC	A13	→	n/a	

E5396A 17-channel single-ended probe			Logic analyzer	
Signal name	**Pad #**		**Channel**	**Pod**
D0	B1	→	0	Whichever pod is plugged into the E5396A probe
D2	B2	→	2	
Ground	B3			
D4	B4	→	4	
D6	B5	→	6	
Ground	B6			
D8	B7	→	8	
D10	B8	→	10	
Ground	B9			
D12	B10	→	12	
D14	B11	→	14	
Ground	B12			
Clock	B13	→	Clock	

Probing Solutions for 40-pin Logic Analyzers
Soft Touch Connectorless Probing (Continued)

Equivalent probe loads

The following probe load models are based on in-circuit measurements made with a Keysight 8753E 6 GHz network analyzer and a Keysight 54750A TDR/TDT using a 50 Ω test fixture. The following schematic accurately models the probe load out to 6 GHz.

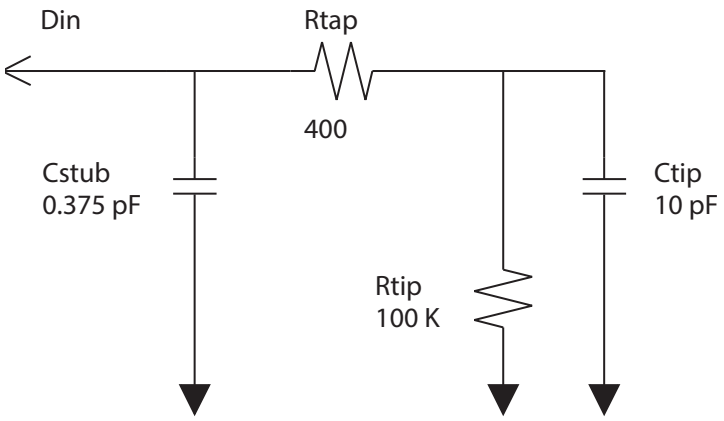

Figure 9.20. Simple (does not include capacitive coupling between channels or inductance of the spring pins).

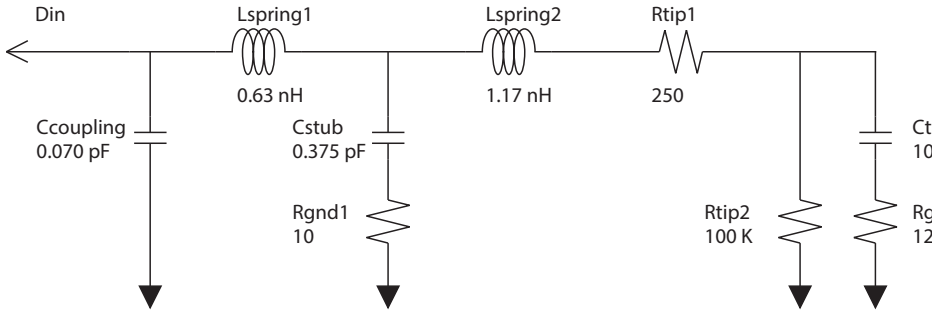

Figure 9.21. Complex (includes capacitive coupling between channels and inductance of spring pins).

Probing Solutions for 40-pin Logic Analyzers
Mictor and Samtec Probing

High-Density, High-Performance

Keysight has developed high-density probing solutions based on the 100-pin Samtec and AMP Mictor 38-pin connectors. The Keysight probes and adapter cables, E5346A, E5339A, E5351A, and E5385A, provide a connection strategy to route your important signals to the Keysight logic analyzer. Simply design the connectors onto the board for the critical signals such as address, data, and status bits. The connectors consume a minimal amount of board space. Each connector provides 32 channels of logic analysis per connector and two clocks (unused clocks can be used as data). Connectors for use with the E5385A, E5346A, E5339A, and E5351A can be purchased directly from AMP, Samtec, or Keysight. See the “Related Information” at the end of this document.

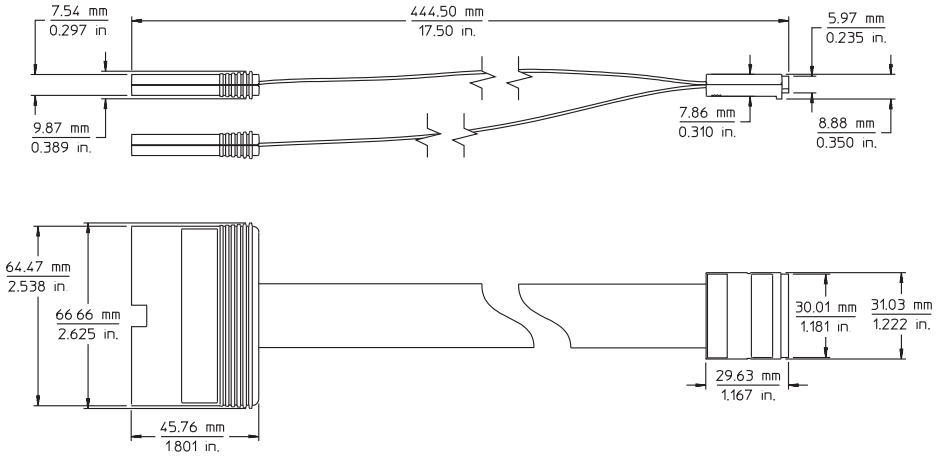

Figure 9.22. E5385A Samtec 100-pin probe mechanical dimensions.

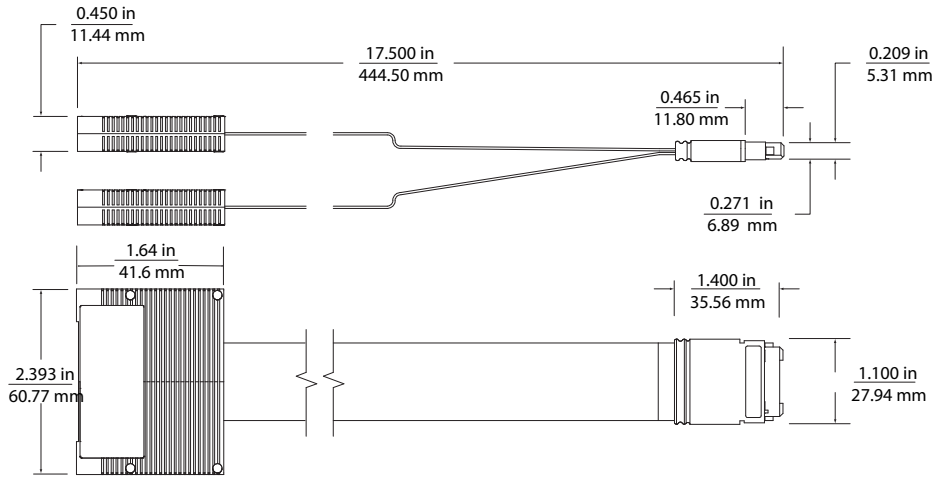

Figure 9.23. E5346A, E5351A, E5339A Mictor probes mechanical dimensions.

Probing Solutions for 40-pin Logic Analyzers
Mictor and Samtec Probing (Continued)

Keysight Technologies E5346A, E5339A, and E5385A probes

The E5346A, E5339A, and E5385A probes include the required isolation networks for the logic analyzer right at the probe tip, close to the target. The E5346A and E5385A are designed to acquire signals with peak-to-peak amplitude as low as 500 mV. The E5339A is designed to acquire signals as small as 250 mV peak-to-peak. Figure 9.24 shows the equivalent load for the E5339A, and Figure 9.25 shows the equivalent load for the E5346A. Figure 9.26 shows the equivalent load for the E5385A.

To use the E5346A, E5339A, or E5385A at high clock speeds, the following design guidelines should be observed:

- Calculate the electrical length of the probe hookup stub.
- For PC board material with E_r=4.9, use a propagation delay of 160 ps/inch.
- Check that the propagation delay of the probe hookup stub is less than 20% of the bus signal rise time (T_r). If it is, the E5346A, E5339A, or E5385A can be used for connection.

For example, if E_r=4.9, a 2.5 inch probe hookup stub generates a propagation delay of 400 ps. If T_r is > 2 ns, the E5346A, E5339A, or E5385A is a viable probing choice.

The E5346A and E5339A use the AMP Mictor 38-pin connector. The E5385A uses a 100-pin connector manufactured by Samtec. Keysight recommends the E5394A or E5385A for new applications, due to the reduced input capacitive loading and improved isolation between adjacent channels.

Equivalent load

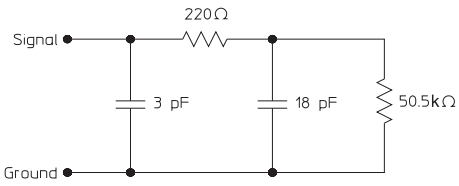

Figure 9.24. E5339A Low Voltage Mictor probe input equivalent load.

Equivalent load

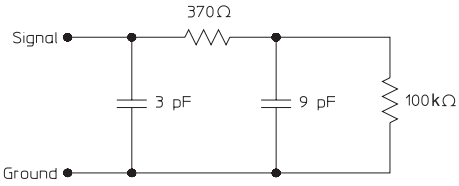

Figure 9.25. E5346A Mictor probe input equivalent load.

Equivalent load

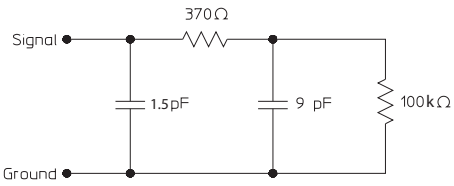

Figure 9.26. E5385A Samtec probe input equivalent load

For additional information on designing connectors into a target system, refer to the following documents:

Keysight E5346A/E5351A Probe/Adapter Cable	Installation note E5346-92016	**http://literature.cdn.keysight.com/litweb/pdf/E5346-92016.pdf**
Keysight E5339A Low Voltage Probe	Installation note E5339-92002	**http://literature.cdn.keysight.com/litweb/pdf/E5339-92002.pdf**
Keysight E5385A Probe	Installation note E5385-92001	**http://literature.cdn.keysight.com/litweb/pdf/E5385-92001.pdf**

Probing Solutions for 40-pin Logic Analyzers
Mictor and Samtec Probing (Continued)

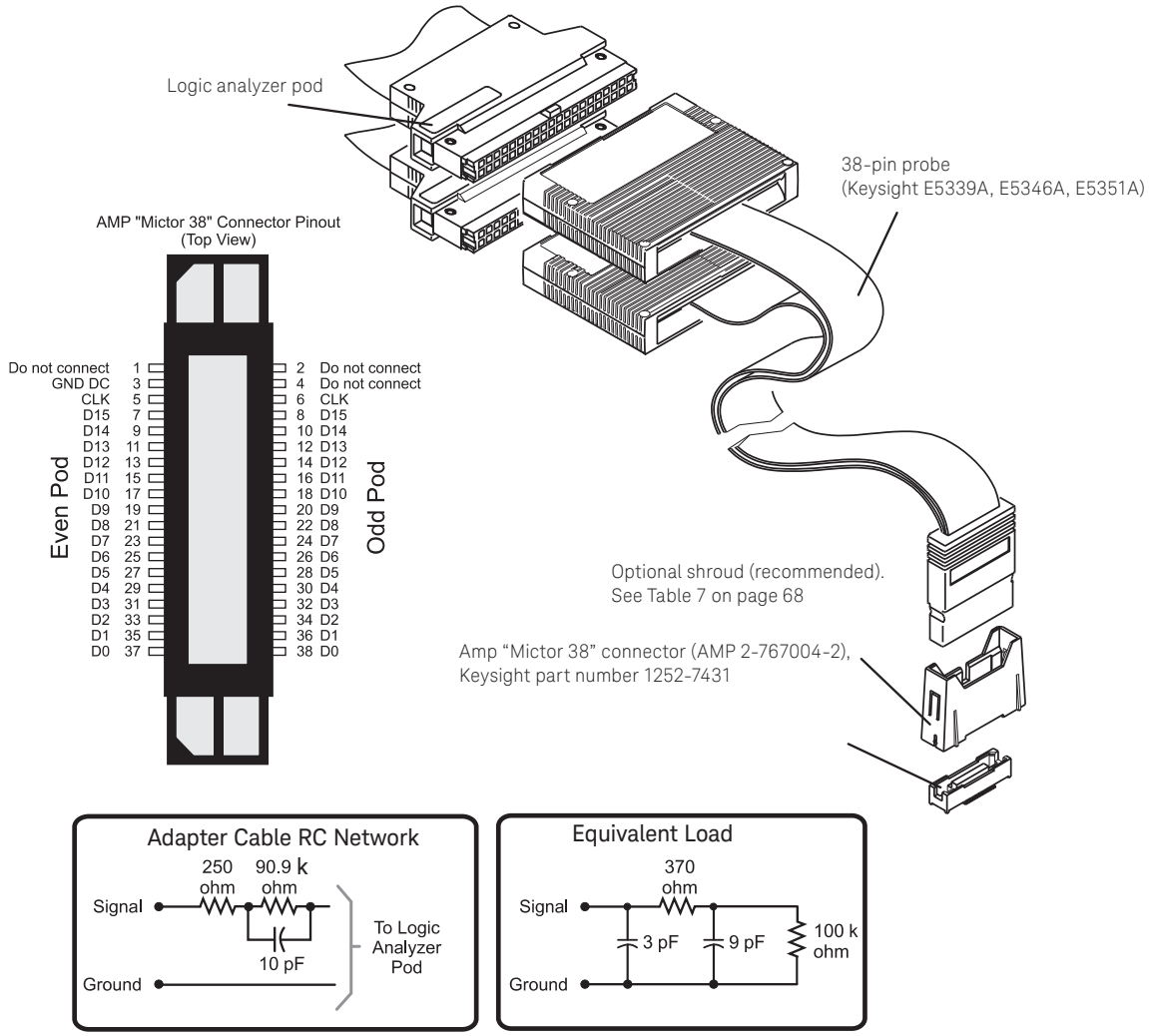

Figure 9.27. Keysight E5339A, E5346A, and E5351A connection and pinout.

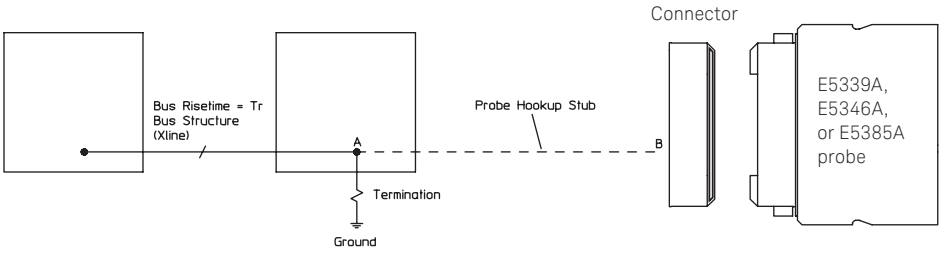

Figure 9.28. Keysight E5339A, E5346A, and E5385A design rules.

Probing Solutions for 40-pin Logic Analyzers
Mictor and Samtec Probing (Continued)

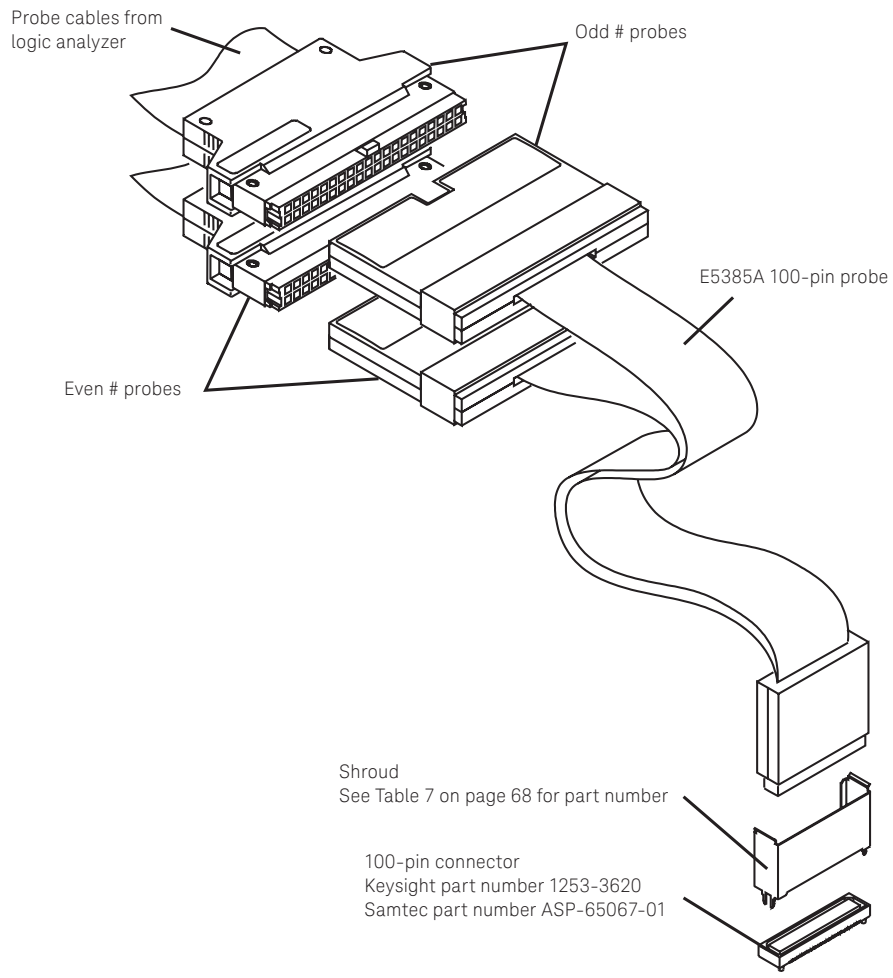

Figure 9.29. Keysight E5385A connection and pinout.

E5385A 100-pin probe pin assignments

Signal	Pin number		Signal
Ground	1	2	Ground
Do Not Connect	3	4	Do Not Connect
Ground	5	6	Ground
Odd D0	7	8	Even D0
Ground	9	10	Ground
Odd D1	11	12	Even D1
Ground	13	14	Ground
Odd D2	15	16	Even D2
Ground	17	18	Ground
Odd D3	19	20	Even D3
Ground	21	22	Ground
Odd D4	23	24	Even D4
Ground	25	26	Ground
Odd D5	27	28	Even D5
Ground	29	30	Ground
Odd D6	31	32	Even D6
Ground	33	34	Ground
Odd D7	35	36	Even D7
Ground	37	38	Ground
Odd D8	39	40	Even D8
Ground	41	42	Ground
Odd D9	43	44	Even D9
Ground	45	46	Ground
Odd D10	47	48	Even D10
Ground	49	50	Ground
Odd D11	51	52	Even D11
Ground	53	54	Ground
Odd D12	55	56	Even D12
Ground	57	58	Ground
Odd D13	59	60	Even D13
Ground	61	62	Ground
Odd D14	63	64	Even D14
Ground	65	66	Ground
Odd D15	67	68	Even D15
Ground	69	70	Ground
NC	71	72	NC
Ground	73	74	Ground
NC	75	76	NC
Ground	77	78	Ground
Odd D16P/ Odd CLK	79	80	Even D16P/ Even CLK
Ground	81	82	Ground
NC	83	84	NC
Ground	85	86	Ground
NC	87	88	NC
Ground	89	90	Ground
NC	91	92	NC
Ground	93	94	Ground
Ground	95	96	Ground
+5V	97	98	+5V
+5V	99	100	+5V

Probing Solutions for 40-pin Logic Analyzers
Mictor and Samtec Probing (Continued)

Keysight E5351A 38-pin adapter cable

If the calculated electrical length of the required routing stub prohibits the use of the Keysight E5339A, E5346A, or E5385A, the Keysight E5351A can be used with the required isolation networks installed on the target.

The E5351A does not have its own internal isolation networks. When using the E5351A, place the SIP isolation networks or equivalent discrete components very near the target component for measurement. Ensure that the stub length between the target component and the isolation network is short. The stub propagation delay should be less than 20% of the bus signal rise time, as mentioned before. The transmission line from the on-board isolation network to the Mictor connector should be designed for an impedance in the range of 80 to 100 ohms (closer to 100 ohms is better). This length should not exceed 3 to 4 inches, and all signal line lengths should be equal. Signal line length variation should not cause propagation delay variation to exceed 20 ps between signal lines.

Notes on using discrete components

Discrete components can be used in the design of the RC network. Keysight recommends the circuit shown in Figure 9.31. To achieve the equivalent load shown in the figure, trace lengths should be minimized by locating the RC network very near the measured node. Actual load will be the stub length load added to the equivalent load in the figure.

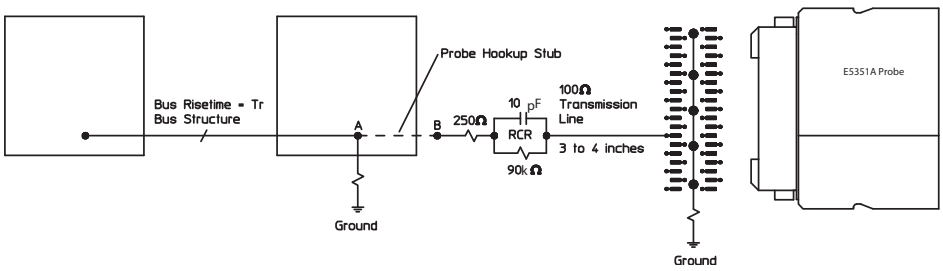

Figure 9.30. Keysight E5351A design rules.

Probing Solutions for 40-pin Logic Analyzers
Mictor and Samtec Probing (Continued)

Options for on-board terminations for the E5351A

There are two options for isolating the E5351A on the target PC board:

- Use the surface mount isolation network, Keysight part number 5062-7396. Refer to Figure 9.32 for schematic and pinout.
- Use discrete components. Refer to Figure 9.31 for recommended components and equivalent load.

If you are operating at state speeds above 200 MHz, you should use discrete components for best results. Due to the added electrical length of the E5351A probe cable, the divider compensating capacitors in the SIP, and surface-mount isolation networks are not optimum for the E5351A, but they are usable up to 200 MHz clock rates.

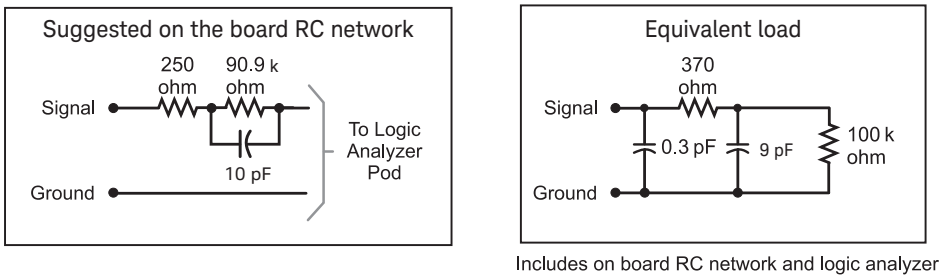

Figure 9.31. Suggested on-board isolation network and equivalent load when using discrete components to terminate the E5351A.

1. The effective input capacitance for on-board isolation networks is purely a function of geometry - 0.3 pF is about as low as can be achieved.
2. The equivalent load is the same when using the surface-mount isolation network, 5062-7396.

Probing Solutions for 40-pin Logic Analyzers
Mictor and Samtec Probing (Continued)

Support shrouds

A support shroud is recommended to provide additional strain relief between the probe and the connector, as shown in Figures 9.27 and 9.29. Two plated through-holes are required on the target board. The shroud is mounted directly to the target board using the through-holes. This places the shroud around the connector, providing solid mechanical strain relief. Connector kits are available; Table 1 shows the Keysight part numbers for shrouds and connector kits for various PC board thicknesses.

Table 7. Mating connectors, shrouds, and kits for Keysight E5339A, E5346A, E5351A, and E5385A probes

For probe model numbers	Description	Keysight part number
E5339A, E5346A, E5351A	Kit of five support shrouds and five 38-pin Mictor connectors for PC board thickness up to 1.57 mm (0.062")	E5346-68701
	Kit of five support shrouds and five 38-pin Mictor connectors for PC board thickness up to 3.175 mm (0.125")	E5346-68700
	One 38-pin Mictor connector (also available from AMP as part number 2-767004-2)	1252-7431
	One support shroud for PC board thickness up to 1.57 mm (0.062")	E5346-44701
	One support shroud for PC board thickness up to 3.175 mm (0.125")	E5346-44704
	One support shroud for PC board thickness up to 4.318 mm (0.700")	E5346-44703
E5385A	Kit of five support shrouds and five 100-pin Samtec connectors for PC board thickness up to 1.57 mm (0.062")	16760-68702
	Kit of five support shrouds and five 100-pin Samtec connectors for PC board thickness up to 3.05 mm (0.120")	16760-68703
	One 100-pin Samtec connector (also available from Samtec as part number ASP-65067-01)	1253-3620
	One support shroud for PC board thickness up to 1.57 mm (0.062")	16760-02302
	One support shroud for PC board thickness up to 3.05 mm (0.120")	16760-02303

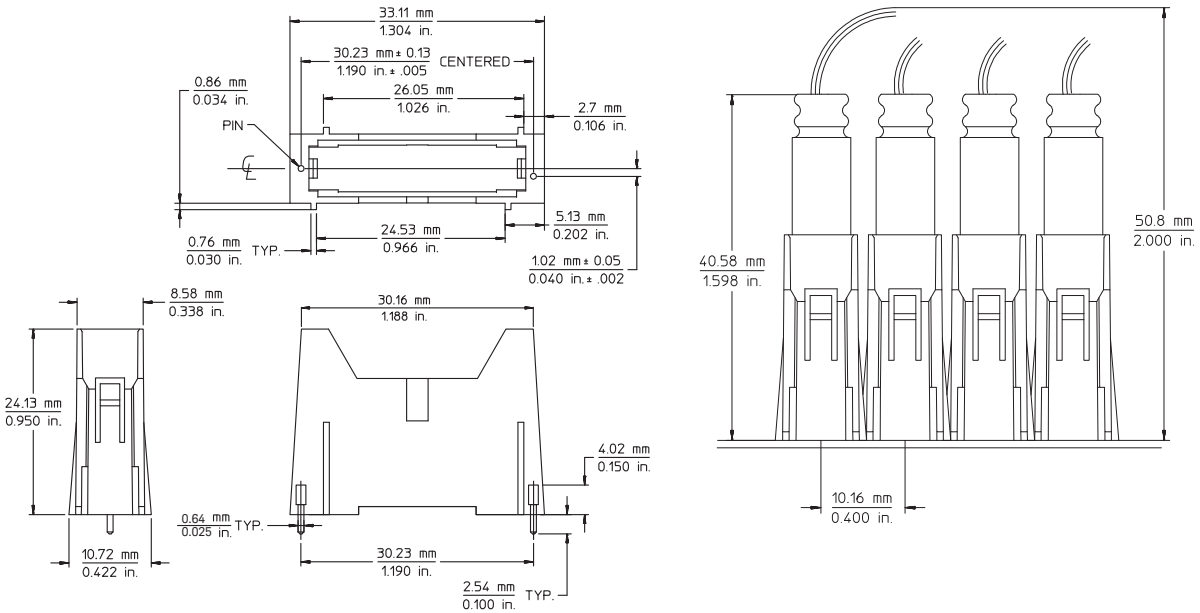

Figure 9.33. Mechanical information for E5346-44701, E5346-44703, E5346-44704 support shrouds for 38-pin Mictor connectors.

Probing Solutions for 40-pin Logic Analyzers
Mictor and Samtec Probing (Continued)

Right-angle Mictor adapter

For systems with space constraints above the 38-pin connector, Keysight offers a right-angle adapter, as shown in Figure 9.34. With the E5346-63201 right-angle adapter inserted in the 38-pin connector, the adapter cable is connected parallel to the target board surface. When using the right-angle adapters, the 38-pin connectors must be placed end-to-end on the target board, as shown in Figure 9.35. Support shrouds cannot be used with the right-angle adapter.

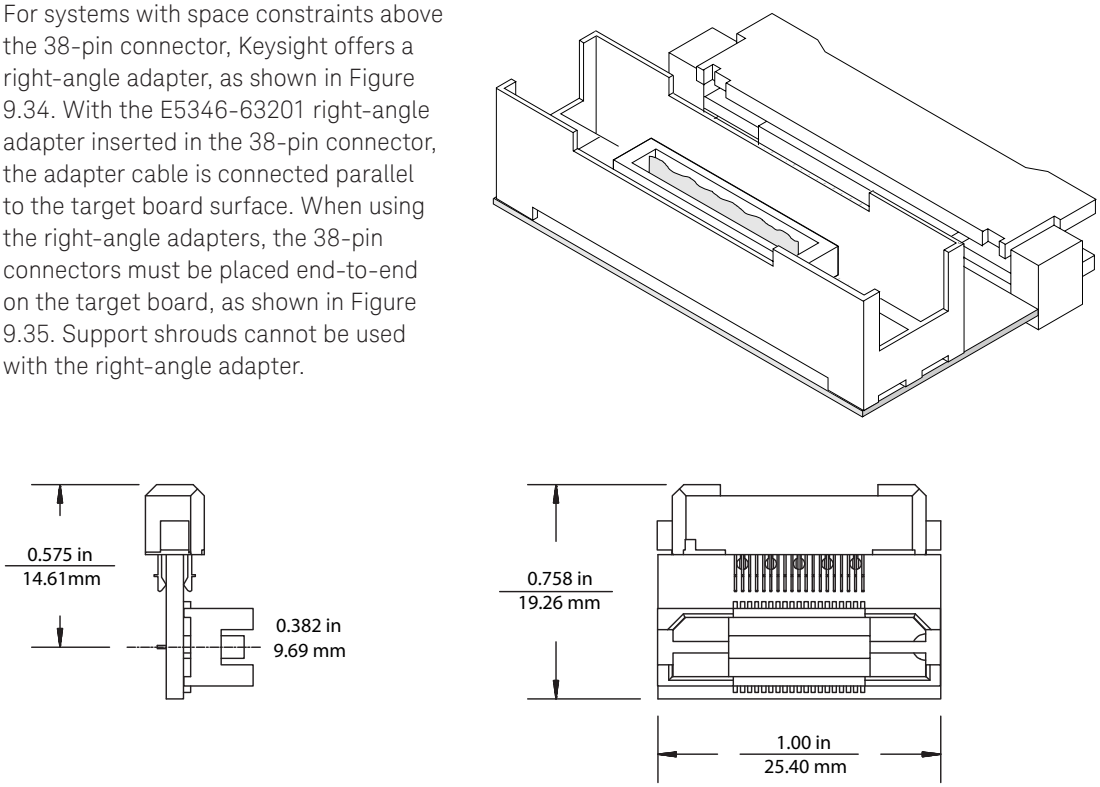

Figure 9.34. E5346-63201 right-angle 38-pin adapter.

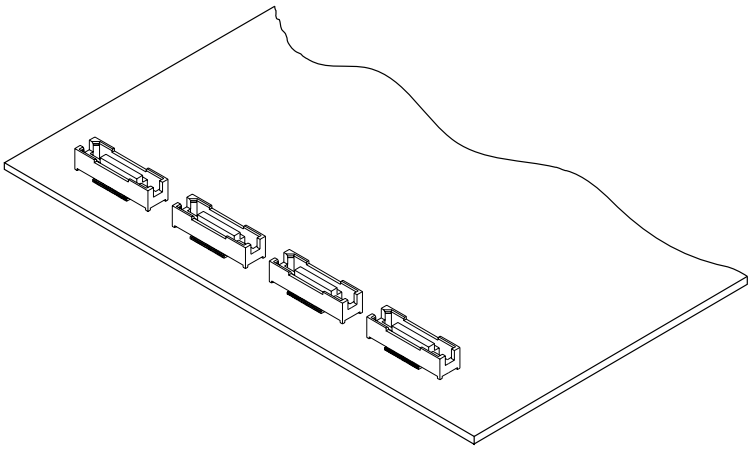

Figure 9.35. 38-pin connectors placed for use of right-angle adapter.

Note: The right-angle adapter adds significant capacitance and inductance in series with the probe. It is not recommended for state speeds above 100 MHz or for signals with rise times < 4 to 5 ns.

Probing Solutions for 40-pin Logic Analyzers
Custom Probing

Low density, moderate performance solutions shown in the “High-Density, High-Performance” (page 62) section of this document can be used in place of the solutions described here. Keysight recommends standard 0.1 inch center connectors for normal density applications if the loading/speed is not a significant issue. Many of these items are available from 3M or Keysight (see Table 8). See the “Related Information” section at the end of this document for 3M address information.

Direct connection through isolation adapter

Isolation adapters (Keysight part number 01650-63203) that connect to the end of the probe cable are designed to perform two functions. The first is to reduce the number of pins required for the header on the target board from 40 pins to 20 pins. This process reduces the board area dedicated to the probing connection. The second function is to provide the proper RC networks in a very convenient package. Figure 9.36 illustrates how the isolation adapter physically connects to the target system and the equivalent load of the isolation adapter connected to a Keysight logic analyzer. Figures 9.37 and 9.38 show the pinout diagrams for the probe cable and the isolation adapter, respectively. There are two 20-pin connectors, along with their Keysight and 3M part numbers, listed in Table 8.

Table 8. Twenty-pin connectors for fixed configuration probing. (Requires isolation adapter)

Keysight part number	3M part number	Connector description
1251-8106	2520-6002	20-pin, low-profile (straight)
1251-8473	2520-5002	20-pin, low-profile (right-angle)

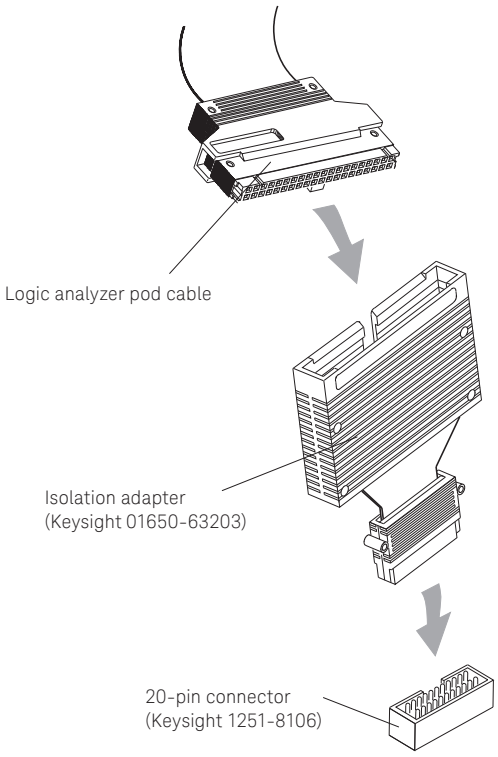

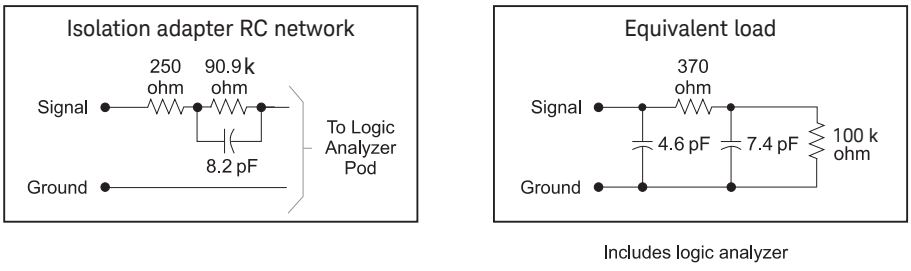

Figure 9.36. Isolation adapter (01650-63203) and equivalent load.

1. The Keysight 01650-63203 saves space by using a common ground (see Figure 4.5). This will impact signal fidelity, especially faster transition times (< 4 to 5 ns).

Probing Solutions for 40-pin Logic Analyzers
Custom Probing (Continued)

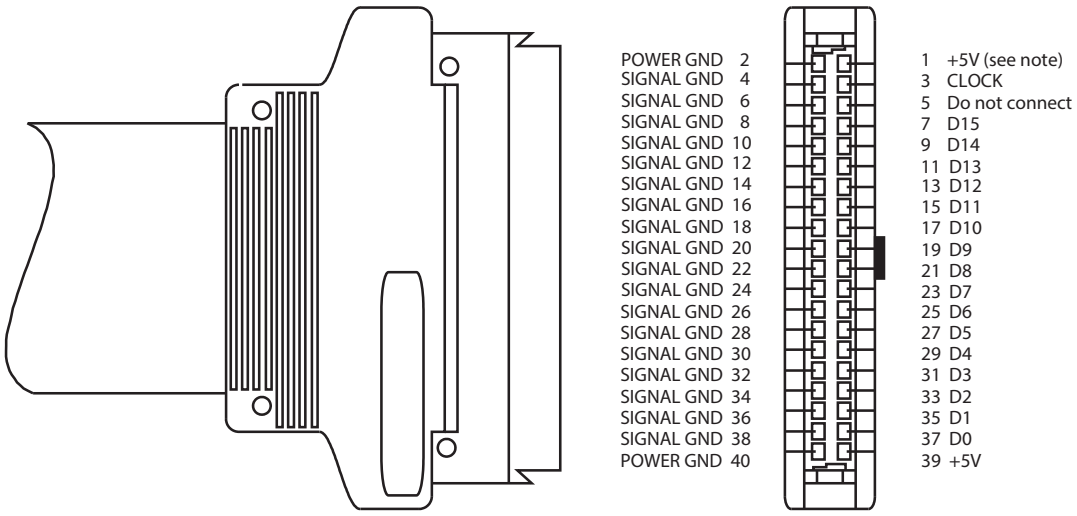

Figure 9.37. Pinout for probe cable.

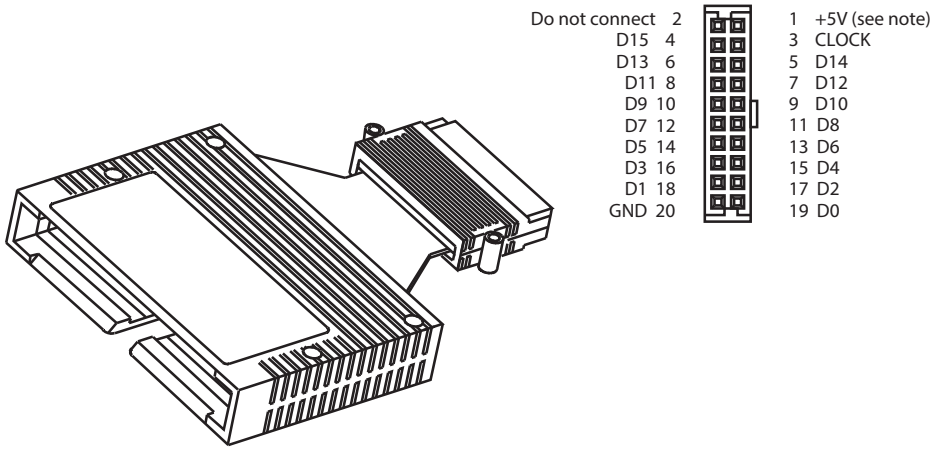

Figure 9.38. Pinout for 100 kΩ isolation adapter (Keysight part number 01650-63203).

1. +5 V is supplied from the logic analyzer to provide power for analysis probes and demo boards.
   DO NOT connect these pins to a +5 V supply in the target system!

Probing Solutions for 40-pin Logic Analyzers
Custom Probing (Continued)

Direct connection through 40-pin connectors

The probe cable also can be plugged directly into the various 40-pin connectors shown in Table 9, but proper isolation networks must be installed directly onto the target system board (see Figure 9.39 for the 40-pin connector pinout).

Discrete components can also be used for the proper isolation network. See Figure 9.42 for an equivalent load diagram for the isolation networks.

Note that the effective input capacitive lead of an isolation network using discrete components is a function of the layout geometry and the parasitic capacitance of the input series damping resistor.

Table 9. Forty-pin connectors for fixed configuration probing. (Requires isolation network installed on target board)

Keysight part number	3M part number	Connector description
1251-8158	2540-5002	40-Pin, low-profile (right-angle)
1251-8831	3432-6302	40-Pin, with long latches (straight)
1251-8931	3432-5302	40-Pin, with long latches (right-angle)

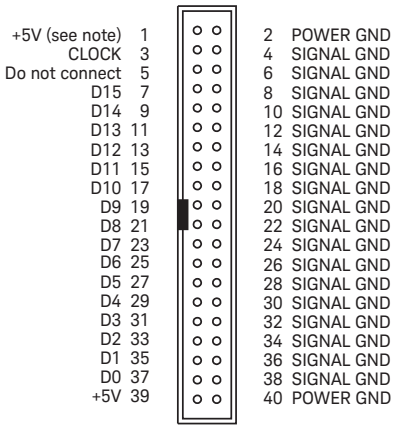

Figure 9.39. Forty-pin connector pinout.

1. +5 V is supplied from the logic analyzer to provide power for analysis probes and demo boards. ***DO NOT connect these pins to a +5 V supply in the target system!***

Probing Solutions for 40-pin Logic Analyzers
Custom Probing (Continued)

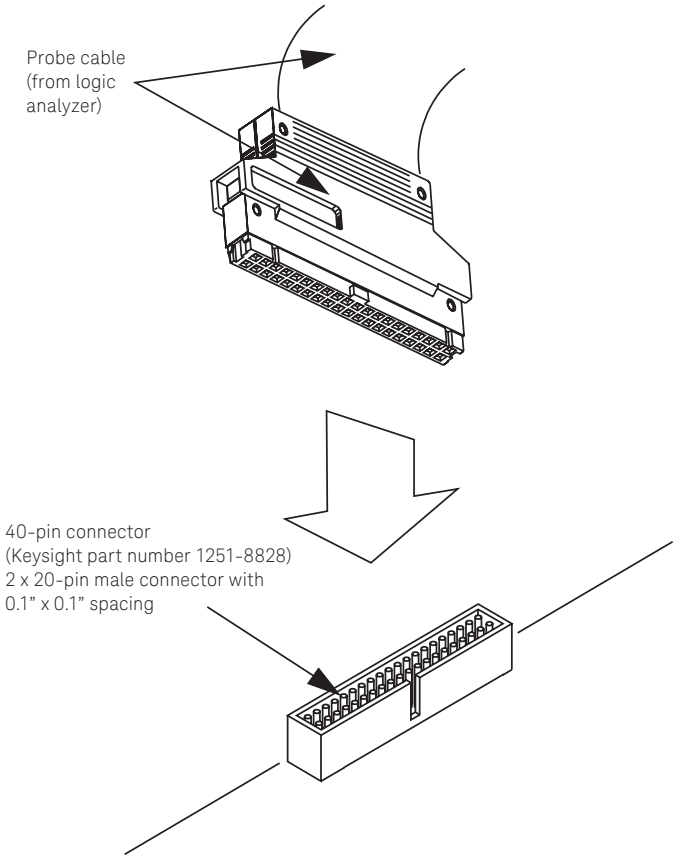

Figure 9.40. Connecting probe cable to 40-pin connector with isolation networks.

Probing Solutions for 40-pin Logic Analyzers
Custom Probing (Continued)

Notes on using discrete components

Discrete components can be used to design the isolation network. Keysight recommends the circuit shown in Figure 9.42. To achieve the equivalent load shown in the figure, trace lengths should be minimized by locating the RC network very near the measured node. Actual load will be the stub length load added to the equivalent load in the figure. Trace length from the suggested on-board RC network to the target connector must be 3 to 4 inches or less. This transmission line should be designed for an impedance in the range of 80 to 100 ohms (closer to 100 ohms is better).

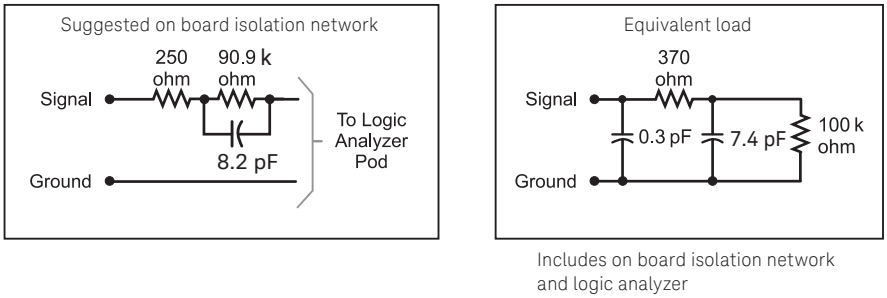

Figure 9.41. Equivalent load for on-target discrete components.

Related Information

Publication title	Publication number
U4164A 4 Gb/s State Mode Logic Analyzer Module - Data Sheet	5992-1057EN

Pattern generator probing and accessories

Publication title	Publication number
Measurement Modules for the 16900 Series - Data Sheet	5989-0422EN
16800 Series Portable Logic Analyzers - Data Sheet	5989-5063EN

Analysis probes for processors and buses

Publication title	Publication number
Application Support for Agilent Logic Analyzers - Configuration Guide	5966-4365E
W2630 Series DDR2 BGA Probes for Logic Analyzers and Oscilloscopes - Data Sheet	5989-5964EN
W3630A Series DDR3 BGA Probes for Logic Analyzers and Oscilloscopes - Data Sheet	5990-3179EN
W4630A Series DDR4 BGA Interposers for Logic Analyzers - Data Sheet	5991-4258EN

3M

http://www.mmm.com/interconnects

AMP, Inc.

Phone: 1-717-986-7777
Fax: 1-717-986-7575
Phone (USA only): 1-800-522-6752
E-mail: product.info@amp.com
Web site: **http://www.amp.com**

Keysight Technologies Test and Measurement Organization support line phone number: 1-800-452-4844

Keysight Technologies Test and Measurement Organization web site: **http://www.keysight.com**

Keysight Technologies Test and Measurement Logic Analyzers web site: **http://www.keysight.com/find/logic**

Keysight Technologies Test and Measurements Accessories web site: **http://www.keysight.com/find/la_probing**

This information is subject to change without notice.
© Keysight Technologies, 2005 - 2022
Published in USA, January 20, 2022
5968-4632E
www.keysight.com