E70582

AS-Interface flat cable insulation displacement connector

FC Splitter AS-i / AUX 1 m M12 UL

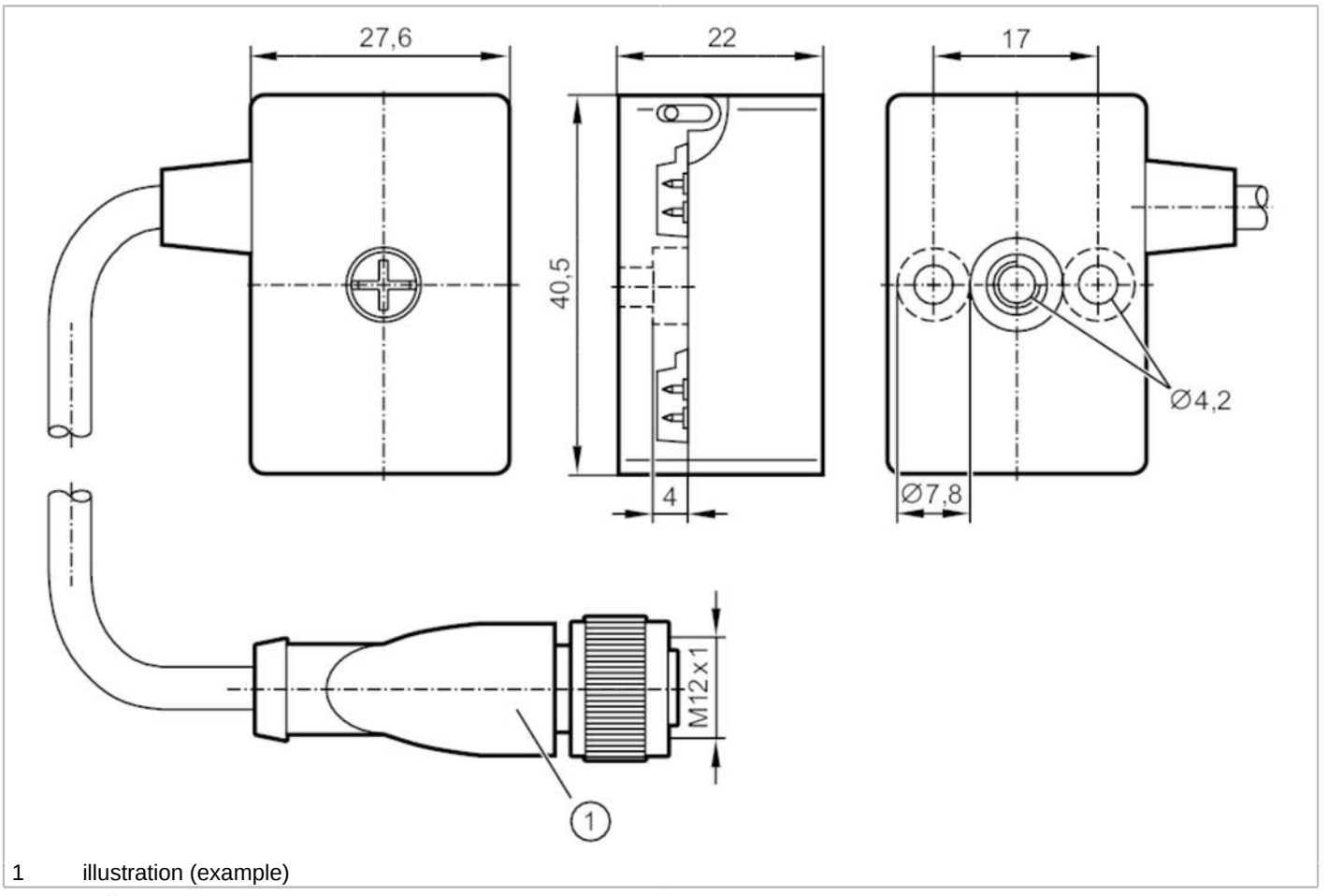

1 illustration (example)

Application		
Application		distribution of the AS-i voltage and the external 24 V supply to M12 socket
Electrical data		
Protection class		III
Max. current load per module/slot	[A]	4
Outputs		
Electrical design		AS-i; (24V)
Operating conditions		
Ambient temperature	[°C]	-25...75
Protection		IP 67
Mechanical data		
Weight	[g]	89
Materials		housing: PBT / PC
Tightening torque	[Nm]	1.65
Accessories		
Accessories (optional)		flat cable end seal:, E70413
		heat-shrink cap:, E70113

E70582

AS-Interface flat cable insulation displacement connector

FC Splitter AS-i / AUX 1 m M12 UL

Remarks	
Remarks	The flat cable must not end in the splitter. Use a flat cable seal or heat-shrink cap for sealing.
Pack quantity	1 pcs.

Electrical connection

Cable: 1 m, PUR, Ø 4.3 mm; 4 x 0.34 mm²

Connector: M12; coding: A; Moulded body: PUR; Tightening torque: ...1.65 Nm

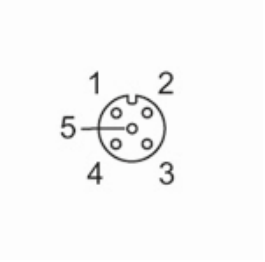

1	AS-i +
2	AUX -
3	AS-i -
4	AUX +