E12269

Y-splitter

ZDO2F030MSS0000-00STGF040MSS

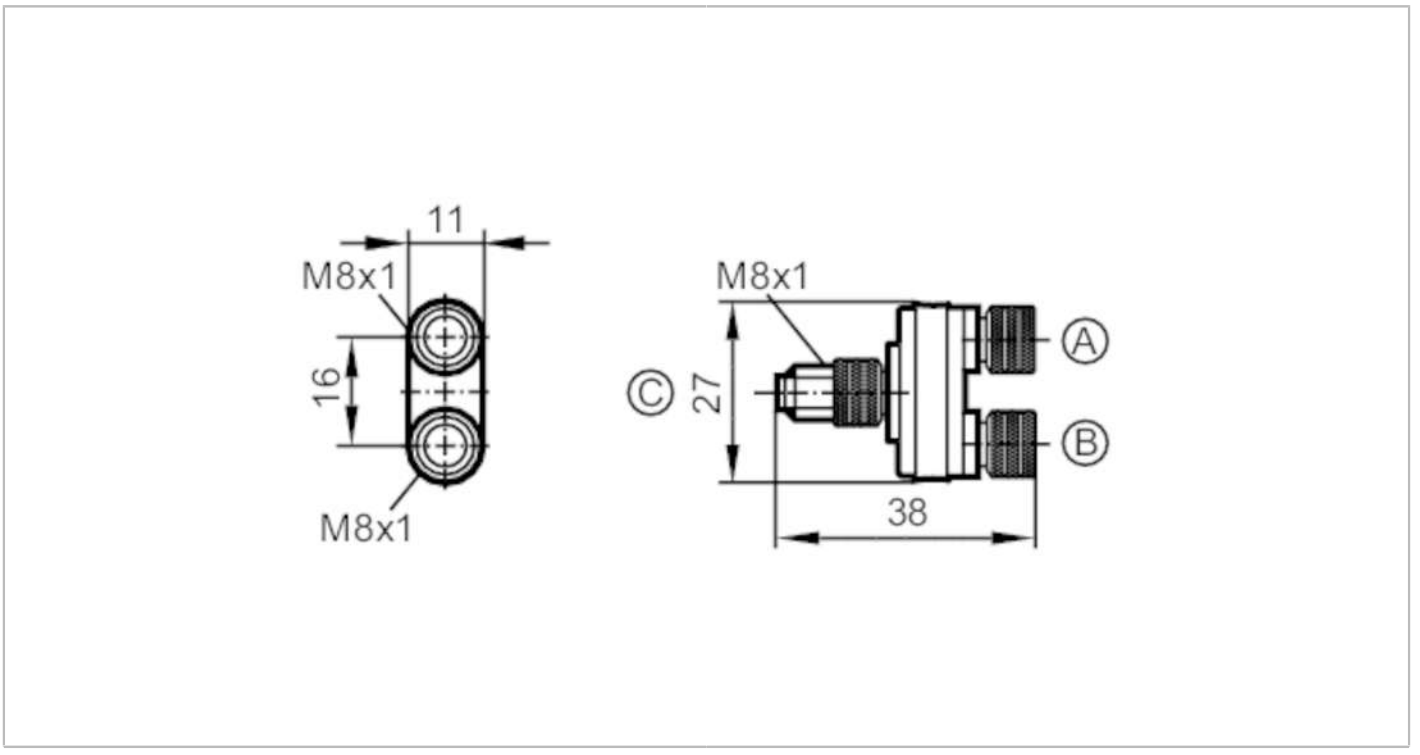

Application		
Special feature		Free from silicone; Gold-plated contacts
Free from silicone		yes
Electrical data		
Operating voltage	[V]	< 30 AC/DC
Protection class		III
Max. current load per module/slot	[A]	3
Max. current load total	[A]	3
Operating conditions		
Ambient temperature	[°C]	-25...90
Protection		IP 68
Mechanical data		
Weight	[g]	15.7
Dimensions	[mm]	11 x 27 x 38
Materials		PUR
Moulded-body material		PUR
Material nut		brass, nickel-plated
Number of ports splitter box		2
Connector type		M8
Remarks		
Pack quantity		1 pcs.

E12269

Y-splitter

ZDO2F030MSS0000-00STGF040MSS

Electrical connection - plug

Connector: 1 x M8; coding: A; Moulded body: PUR; Locking: brass, nickel-plated; Contacts: gold-plated



Connection

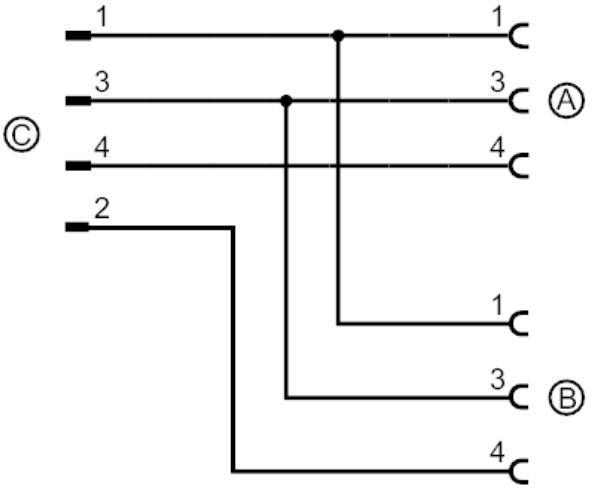

Electrical connection - socket

Connector: 2 x M8; coding: A; Moulded body: PUR; Locking: brass, nickel-plated; Contacts: gold-plated

