Level | Pressure | Flow | Temperature | Liquid Analysis | Registration | Systems Components | Services | Solutions

Technical Information

Prosonic T FMU30

Ultrasonic Level Measurement
Compact transmitters for non-contact level measurement of fluids, pastes and coarse bulk materials





Application

- Continuous, non-contact level measurement in fluids, pastes, sullages and coarse bulk materials
- System integration via 4 to 20 mA
- Maximum measuring range:
  - 1½" sensor: 5 m (16 ft) in fluids
    2 m (6 ft) in bulk materials
  - 2" sensor: 8 m (26 ft) in fluids
    3.5 m (11 ft) in bulk materials

Features and benefits

- Quick and simple commissioning via menu-guided on-site operation with four-line plain text display; 7 languages selectable
- Envelope curves on the on-site display for simple diagnosis
- Linearization function (up to 32 points) for conversion of the measured value into any unit of length, volume or flow rate
- Non-contact measurement method minimizes service requirements
- Installation possible from thread G 1½“ or NPT 1½“ upwards
- Integrated temperature sensor for automatic correction of the temperature dependent sound velocity

TI00440F/00/EN/15.14
71225633

Endress+Hauser
People for Process Automation

Table of contents

Function and system design 3
Measuring principle 3
Equipment architecture 4

Input 5
Measured variable 5
Measuring range 5
Operating frequency 6

Output 6
Output signal 6
Signal on alarm 6
Output damping 6
Linearization 6

Power supply 7
Terminal compartment 7
Terminal assignment 7
Supply voltage 8
Terminals 8
Cable entry 8
Cable gland 8
Power consumption 8
Current consumption 8

Performance characteristics 8
Reaction time 8
Reference operating conditions 8
Measured value resolution 8
Pulse frequency 8
Maximum measuring error 8
Typical measuring error 8
Influence of the vapor pressure 8

Installation 9
Installation variants 9
Installation conditions for level measurements 10
Installation in narrow shafts 10
Installation conditions for flow measurements 11
Blocking distance, nozzle installation 12

Environment 13
Ambient temperature range 13
Storage temperature 13
Resistance to alternating temperature cycles 13
Climate class 13
Ingress protection 13
Vibration resistance 13
Electromagnetic compatibility (EMC) 13

Process 13
Process temperature range 13
Process pressure range 13

Mechanical construction 14
Design; dimensions 14
Weight 14
Housing design 14
Process connection 14
Materials 15

Operability 16
Display and operating elements 16
On-site operation 18
Remote operation 18

Certificates and Approvals 20
CE mark 20
Ex approvals 20
Ex approval 20
External standards and guidelines 20

Ordering information 21
FMU30 21
Scope of delivery 22

Accessories 22
Installation bracket 22
Screw in flange 23
Cantilever with mounting frame or wall bracket 24
Weather protection cover 26
Commubox FXA291 27
ToF Adapter FXA291 27

Documentation 27
Operating manual 27
Description of device functions 27
Short instructions 27
Safety Instructions 27

Function and system design

Measuring principle

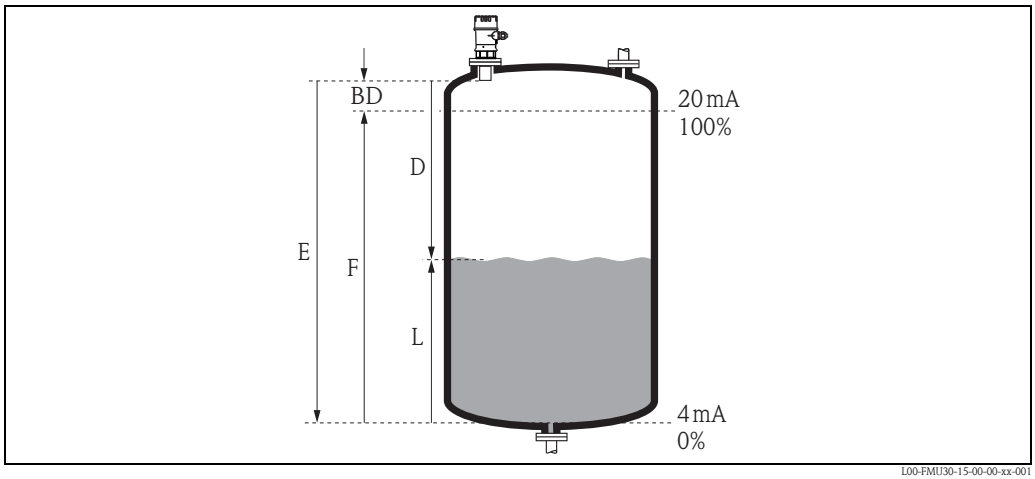

BD *Blocking distance*
D *Distance from sensor membrane – product surface*
E *Empty distance*
F *Span (full distance)*
L *Level*

Sensor	BD	Max. range fluids	Max. range bulk materials
1½"	0.25 m (0.8 ft)	5 m (16 ft)	2 m (6.6 ft)
2"	0.35 m (1.1 ft)	8 m (26 ft)	3.5 m (11 ft)

Time-of-flight method

The sensor of the instrument transmits ultrasonic pulses in the direction of the product surface. There, they are reflected back and received by the sensor. The instrument measures the time t between pulse transmission and reception. The instrument uses the time t (and the velocity of sound c) to calculate the distance D between the sensor membrane and the product surface:

$D = c \cdot t/2$

As the device knows the empty distance E from a user entry, it can calculate the level as follows:

$L = E - D$

An integrated temperature sensor (NTC) compensates for changes in the velocity of sound caused by temperature changes.

Interference echo suppression

The interference echo suppression feature on the instrument ensures that interference echos (e.g. from edges, welded joints and installations) are not interpreted as a level echo.

Calibration

Enter the empty distance E and the span F to calibrate the device.

Blocking distance

Span F may not extend into the blocking distance BD. Level echos within the blocking distance cannot be evaluated due to the transient characteristics of the sensor.

Equipment architecture

The complete measuring system consists of:

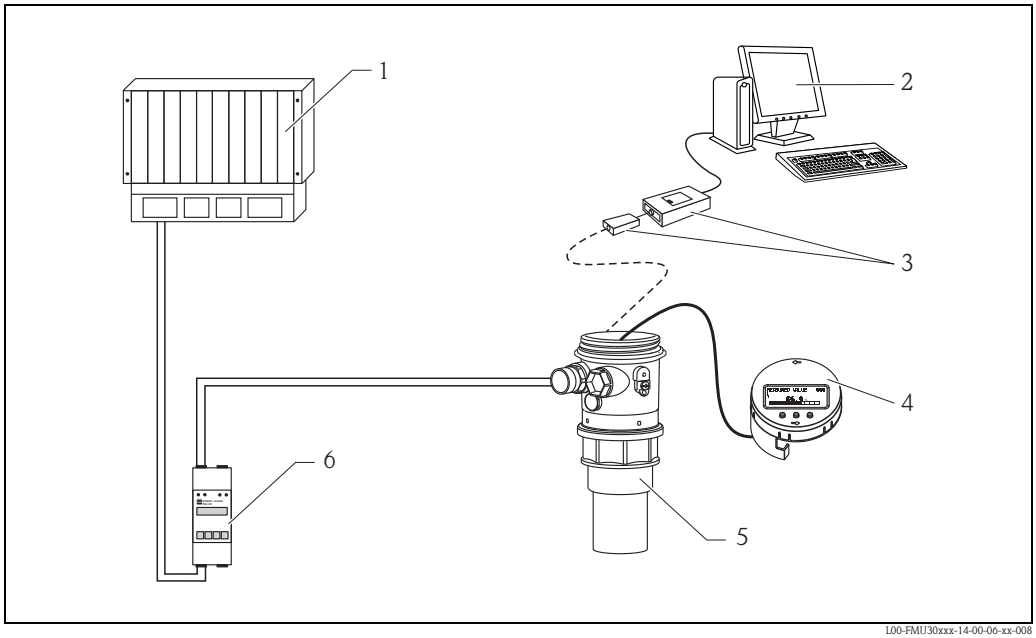

1 PLC (programmable logic controller)
2 Computer with operating tool (e.g. FieldCare)
3 Commubox FXA291 and ToF Adapter FXA291
4 Operating and display module
5 Prosonic FMU30
6 Transmitter power supply unit RMA42 or RN221N

On-site operation

- With display and operating module
- With a PC, Commubox FXA291 + ToF Adapter FXA291 and the operating software FieldCare

Input

Measured variable

The distance D between the sensor membrane and the product surface is measured, see also figure → 🖹 3.

Using the linearization function, the device uses D to calculate:
- Level L in any units
- Volume V in any units
- Flow Q across measuring weirs or open channels in any units

Measuring range

The measuring range is limited by the range of a sensor. The sensor range is, in turn, dependent on the operating conditions. To estimate the actual range, proceed as follows (see also the calculation example in the diagram):

1. Determine which of the influences shown in the following table are appropriate for your process.
2. Add the corresponding attenuation values.
3. From the total attenuation, use the diagram to calculate the range.

Fluid surface	Attenuation
Calm	0 dB
Waves	5 to 10 dB
Strong turbulence (e.g. stirrers)	10 to 20 dB
Foaming	Please contact your Endress+Hauser sales representative.

Bulk material surface	Attenuation
Hard, rough (e.g. rubble)	40 dB
Soft (e.g. peat, dust-covered clinker)	40 to 60 dB

Dust	Attenuation
No dust formation	0 dB
Little dust formation	5 dB
Heavy dust formation	5 to 20 dB

Filling curtain in detection range	Attenuation
None	0 dB
Small quantities	5 to 10 dB
Large quantities	10 to 40 dB

Temperature difference between sensor and product surface	Attenuation
to 20 °C (68 °F)	0 dB
to 40 °C (104 °F)	5 to 10 dB
to 60 °C (140 °F)	10 to 15 dB

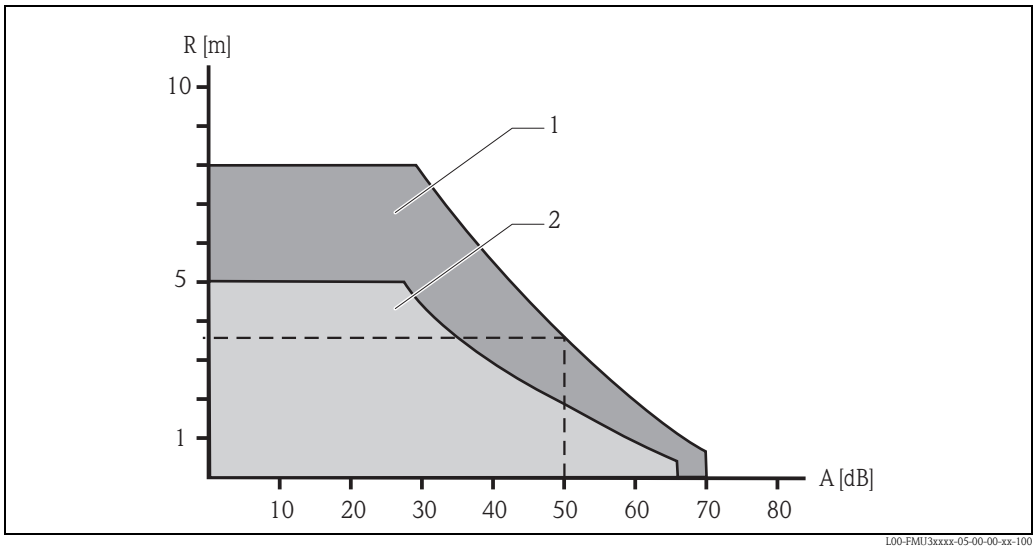

1 *Sensor 2"*
2 *Sensor 1½"*
A *Attenuation (dB)*
R *Range (m)*

Example

■ Strong turbulence surface	approx. 50 dB	
■ No dust formation	0 dB	
■ Filling curtain in detection range	10 dB	
■ Temperature diff. < 20 °C (68 °F)	0 dB	
	approx. 50 dB	⇒ range approx. 3.5 m (11 ft) for FMU30 2" sensor

These measuring conditions have been taken into account during the calculation of the maximum measuring range in solid applications.

Operating frequency

1½" sensor	2" sensor
approx. 70 kHz	approx. 50 kHz

Output

Output signal

4 to 20 mA

Signal on alarm

Error information can be accessed via the following interfaces:
- On-site display (error symbol, error code and plain text description)
- Current output, signal on error can be selected (e.g. according to NAMUR recommendation NE43)

Output damping

Freely selectable, 0 to 255 s

Linearization

The linearization function of the instrument allows conversion of the measured value into any unit of length or volume. In open channels or measuring weirs, also a flow linearization is possible (calculation of the flow from the measured level).
The linearization table for calculating the volume in an horizontal cylindrical tank is preprogrammed. You can also enter any number of other tables containing up to 32 value pairs either manually or semi-automatically (by filling the vessel under controlled conditions).

Power supply

Terminal compartment

The terminals are located underneath the housing cover.

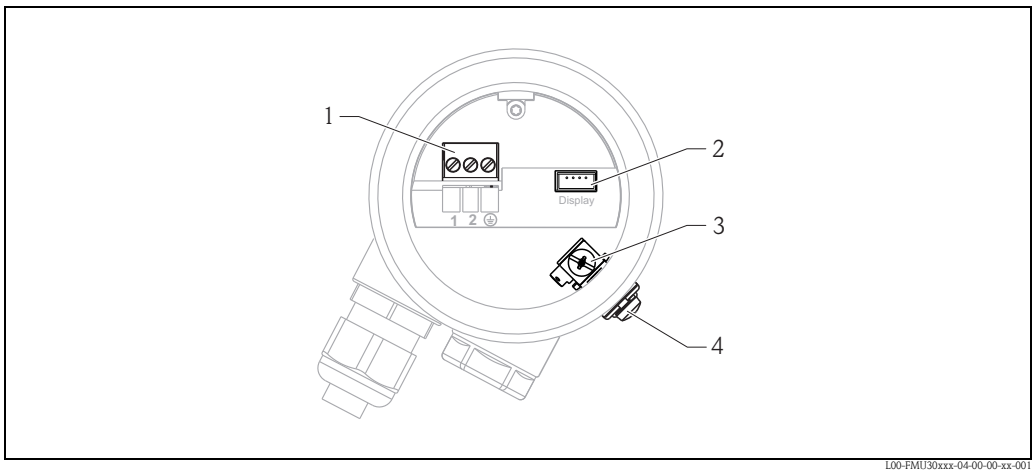

L00-FMU30xxx-04-00-00-xx-001

1 Terminals
2 Optional: display
3 Internal earth terminal
4 External earth terminal

Terminal assignment

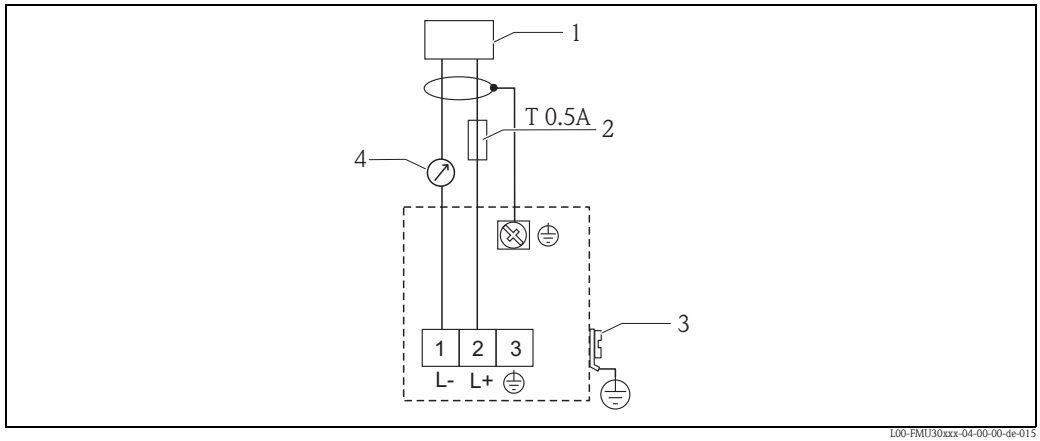

L00-FMU30xxx-04-00-00-de-015

1 Power
2 Fuse as per IEC 60127, T 0.5 A
3 Plant ground
3 4...20 mA

- Connect the connecting line to the screw terminals (line cross-sections of 0.25 to 2.5 mm^2 (24...14 AWG)) in the terminal compartment.
- A standard installation cable is sufficient for the connection.
- Protective circuitry against reverse polarity, RFI and over-voltage peaks is built into the device (see also Technical Information TI00241F/00/EN "EMC Test Procedures")

Supply voltage	14-35 V
Terminals	Cable cross-section: 0.25 to 2.5 mm2 (24 to 14 AWG)
Cable entry	G ½" or ½" NPT
Cable gland	M20x1.5 (recommended cable diameter 6 to 10 mm (0.24 to 0.39 in))
Power consumption	51 mW to 800 mW
Current consumption	3.6 to 22 mA

Performance characteristics

Reaction time	The reaction time depends on the parameter settings. The minimum value is: min. 2 s
Reference operating conditions	■ Temperature = +20 °C (+68 °F) ■ Pressure = 1013 mbar abs. (15 psi abs.) ■ Humidity = 50 % ■ Ideal reflective surface (e.g. calm, smooth fluid surface) ■ No interference reflections within signal beam ■ Set application parameters: – Tank shape = dome ceiling – Medium property = liquid – process conditions = standard liquid
Measured value resolution	1 mm (0.04 in)
Pulse frequency	max. 0.5 Hz The exact values are dependent on the type of device and the parameter settings.
Maximum measuring error[1) 2)]	±0.2 % of the maximum span of the sensor
Typical measuring error[2)]	Include linearity, repeatability, and hysteresis Better than: ±3 mm (±0.12 in) or 0.2 % of measuring distance* * whichever is greater
Influence of the vapor pressure	The vapor pressure at 20 °C (68 °F) gives a hint on the accuracy of the ultrasonic level measurement. If the vapor pressure at 20 °C (68 °F) is below 50 mbar (1 psi), ultrasonic level measurement is possible with a very high accuracy. This is valid for water, aqueous solutions, water-solid-solutions, dilute acids (hydrochloric acid, sulfuric acid, ...), dilute bases (caustic soda, ...), oils, greases, slurries, pastes, ... High vapor pressures or outgassing media (ethanol, acetone, ammonia, ...) can influence the accuracy. If conditions like these are present, please contact your Endress+Hauser sales representative.

1) according to EN 61298-2
2) with reference operating conditions

Installation

Installation variants

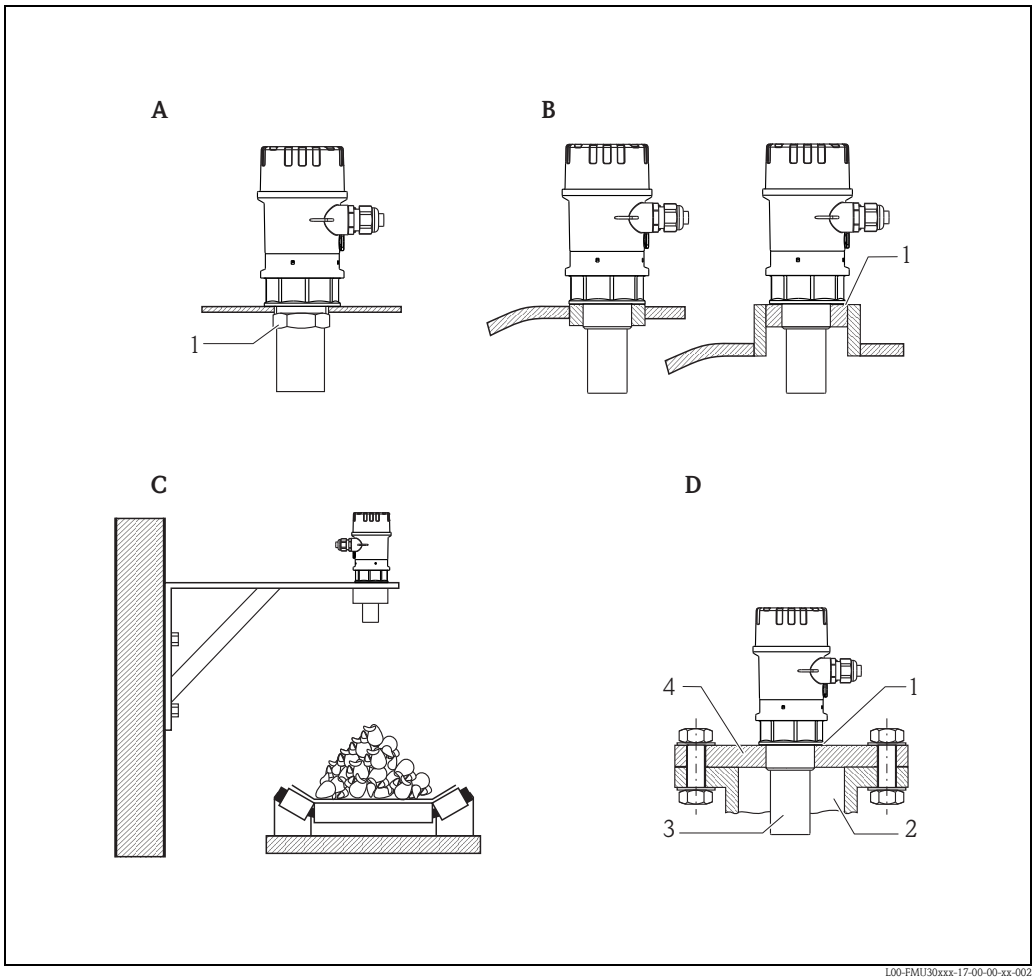

L00-FMU30xxx-17-00-00-xx-002

A *Installation with counter nut*
1 counter nut (PC) supplied for G1½ and G2 instruments
B *Installation with sleeve*
1 sealing (EPDM) supplied
C *Installation with installation bracket*
D *Installation with screw in flange*
1 sealing (EPDM) supplied
2 nozzle
3 sensor
4 screw in flange

For installation bracket or screw in flange → 22, "Accessories".

Installation conditions for level measurements

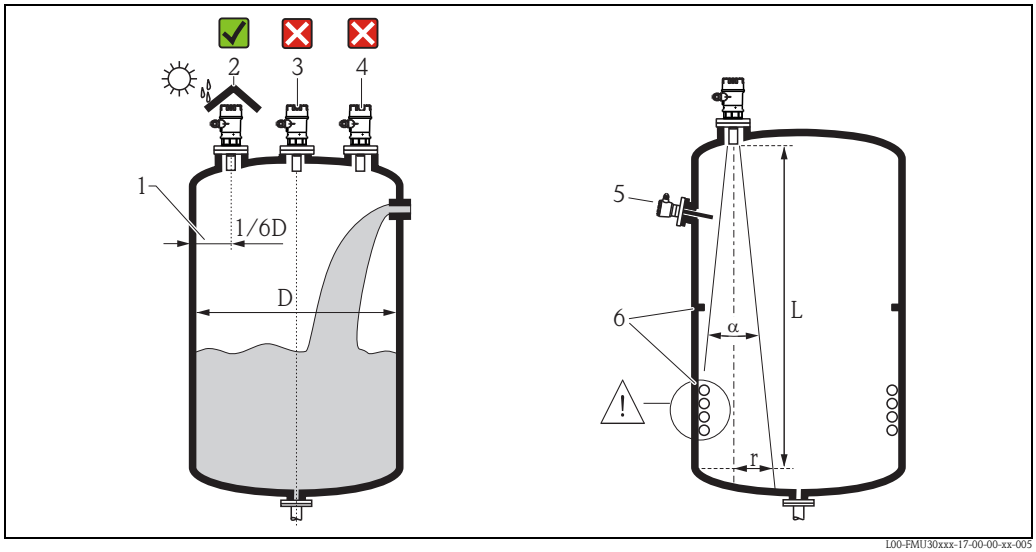

- Do not install the sensor in the middle of the tank (3). We recommend leaving a distance between the sensor and the tank wall (1) measuring 1/6 of the tank diameter.
- Protect the device against direct sun or rain (2) → 📄 26 "Weather protection cover".
- Avoid measurements through the filling curtain (4).
- For solid application where bulk solid cones appear, align the sensor membrane perpendicular to the surface.
- Make sure that equipment (5) such as limit switches, temperature sensors, etc. are not located within the emitting angle α. In particular, symmetrical equipment (6) such as heating coils, baffles etc. can influence measurement.
- Never install two ultrasonic measuring devices in a tank, as the two signals may affect each other.
- To estimate the detection range, use the 3 dB emitting angle α.

Sensor	α	L_{max}	r_{max}
1½"	11°	5 m (16 ft)	0.48 m (1.6 ft)
2"	11°	8 m (26 ft)	0.77 m (2.5 ft)

Installation in narrow shafts

In narrow shafts with strong interference echoes, we recommend using an ultrasound guide pipe (e.g. PE or PVC wastewater pipe) with a minimum diameter of 100 mm (3.94 in).
Make sure that the pipe is not soiled by accumulated dirt. If necessary, clean the pipe at regular intervals.

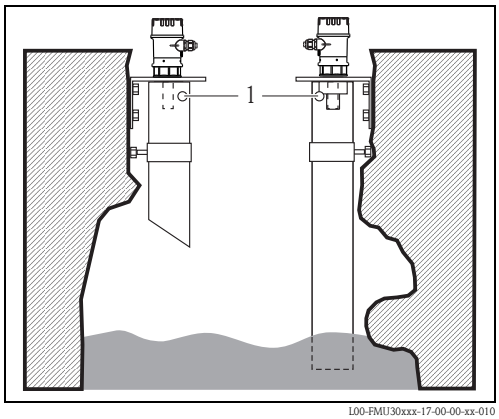

1 Venting hole

Installation conditions for flow measurements

- Install the instrument at the inflow side (B), as close above the maximum water level H_{max} as possible (take into account the blocking distance BD).
- Position the instrument in the middle of the channel or weir.
- Align the sensor membrane parallel to the water surface.
- Keep to the installation distance of the channel or weir.

Example: Khafagi-Venturi flume

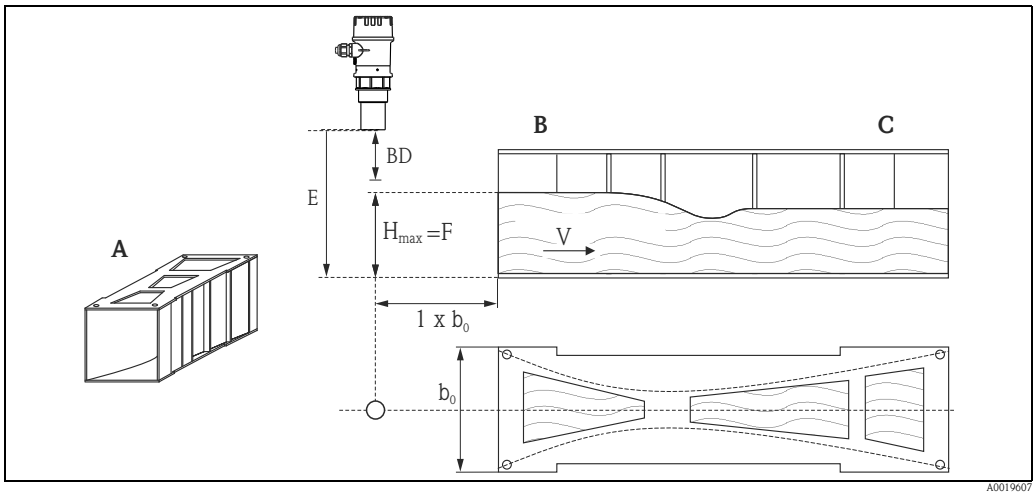

A *Khafagi-Venturi flume*
B *Inflow*
C *Outflow*

BD *Blocking distance*
E *Empty calibration*
F *Full calibration*
V *Direction of flow*

Example: Triangular weir

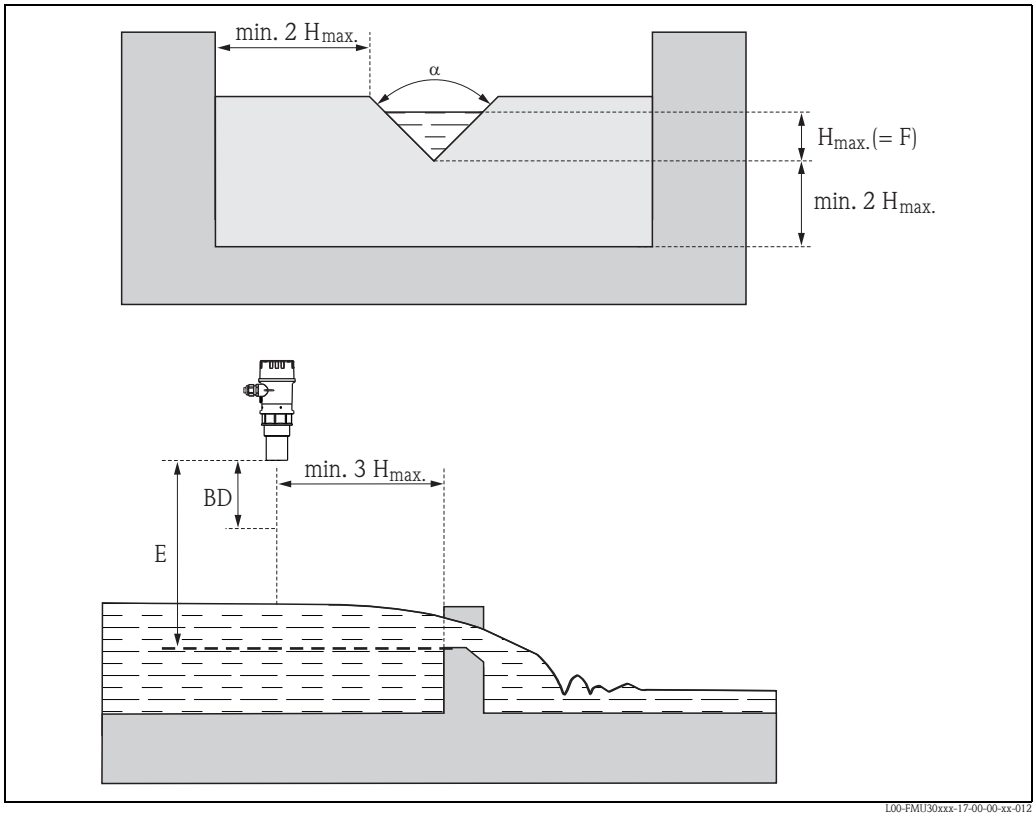

BD *Blocking distance*
E *Empty calibration*
F *Full calibration*

Blocking distance, nozzle installation

Install the instrument at a height so that the blocking distance BD is not undershot, even at maximum fill level. Use a pipe nozzle if you cannot maintain the blocking distance in any other way. The interior of the nozzle must be smooth and may not contain any edges or welded joints. In particular, there should be no burr on the inside of the tank side nozzle end. Note the specified limits for nozzle diameter and length. To minimise disturbing factors, we recommend an angled socket edge (ideally 45°).

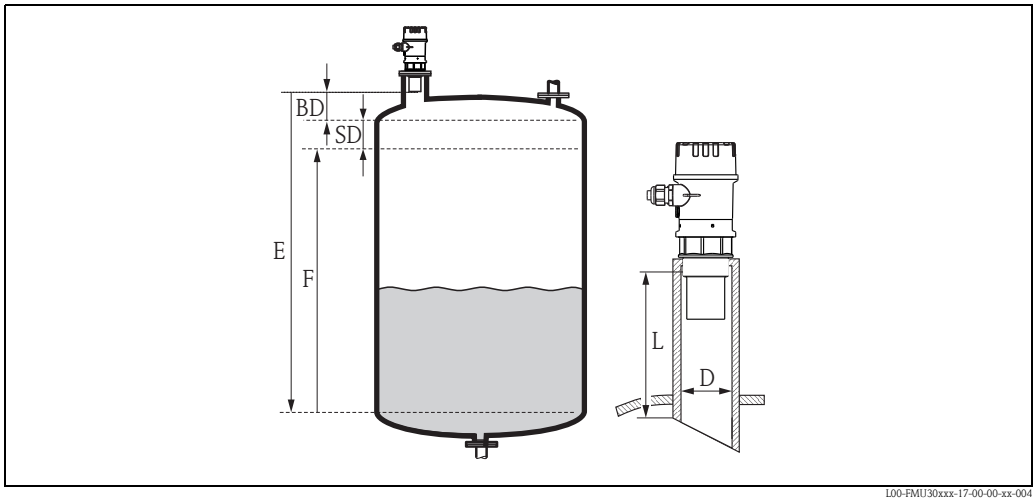

BD Blocking distance
SD Safety distance
E Empty calibration
F Full calibration (span)
D Nozzle diameter
L Nozzle length

	Maximum nozzle length mm (in)	
Nozzle diameter	**1½" sensor**	**2" sensor**
DN50/2"	80 (3.15)	–
DN80/3"	240 (9.45)	240 (9.45)
DN100/4"	300 (11.8)	300 (11.8)
DN150/6"	400 (15.7)	400 (15.7)
DN200/8"	400 (15.7)	400 (15.7)
DN250/10"	400 (15.7)	400 (15.7)
DN300/12"	400 (15.7)	400 (15.7)
Sensor characteristics		
Emitting angle α	11°	11°
Blocking distance (m [ft])	0.25 (0.8)	0.35 (1.1)
Max. range (m [ft]) in liquids	5 (16)	8 (26)
Max. range (m [ft]) in solids	2 (6.6)	3.5 (11)

Caution!
If the blocking distance is undershot, it may cause device malfunction.

Note!
In order to notice if the level approaches the blocking distance, you can specify a safety distance (SD). If the level is within this safety distance, the instrument outputs a warning or alarm message.

Environment

Ambient temperature range	–20 °C to +60 °C (–4 °F to +140 °F) Use a protective cover, in order to protect the sensor from direct sun or rain → 📄 26, "Weather protection cover".
Storage temperature	–40 °C to +80 °C (–40 °F to +176 °F)
Resistance to alternating temperature cycles	To DIN EN 60068-2-14; Nb test : +60°C/–20°C (+140 °F/–4 °F), 0.5 K/min, 100 cycles
Climate class	DIN EN 60068-2-38 (Test Z/AD) DIN/IEC 68 T2-30Db
Ingress protection	■ With closed housing, tested according to – IP68, 24h at 1.83 m (6.0 ft) under water surface – IP66 ■ With open housing: IP20 (also ingress protection of the display)
Vibration resistance	DIN EN 60068-2-64 / IEC 68-2-64: 20 to 2000 Hz, 1 $(m/s^2)^2$/Hz; 3 x 100 min
Electromagnetic compatibility (EMC)	■ Electromagnetic compatibility to EN 61326. For details refer to the declaration of conformity. ■ With regard to interference immunity the requirements for "industrial environment" are met. ■ Influence of EMC < 1 % FS

Process

Process temperature range	–20 °C to +60 °C (–4 °F to +140 °F) A temperature sensor is integrated in the sensor for correction of the temperature-dependent time-of-flight.
Process pressure range	0.7 bar to 3 bar abs. (10.15 psi to 43.5 psi)

Mechanical construction

Design; dimensions

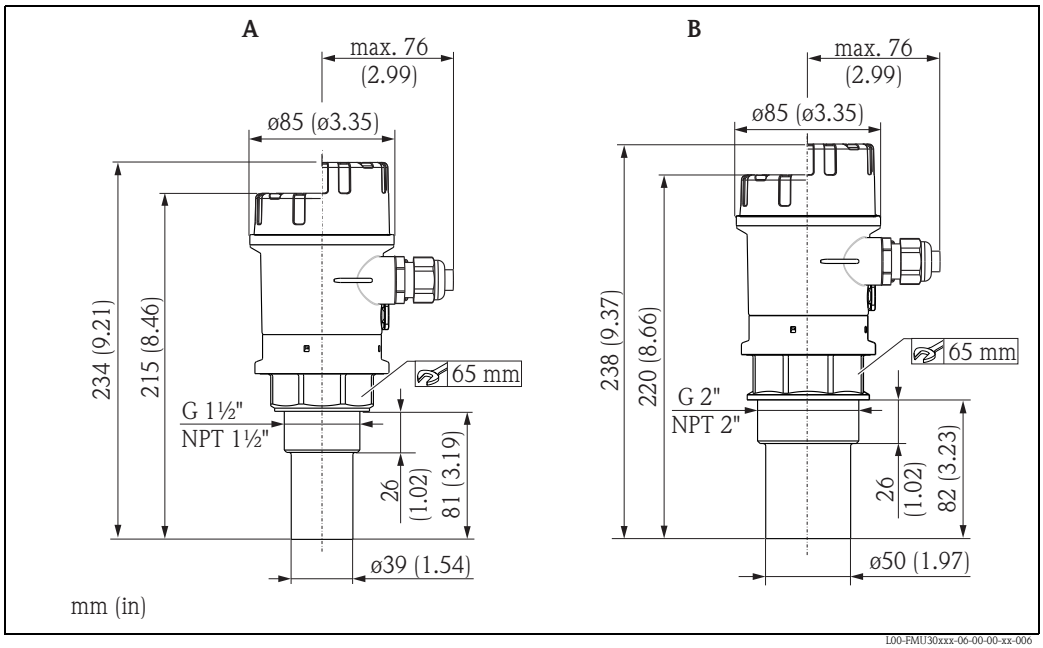

A *Sensor 1½"*
B *Sensor 2"*

Weight

Sensor	Weight
1½"	approx. 0.75 kg (1.65 lbs)
2"	approx. 0.8 kg (1.76 lbs)

Housing design

Type of housing

F16 plastic housing

Cover

Plastic cover

- For version without on-site display (low, grey)
- For version with on-site display (high, transparent)

Process connection

Sensor	Process connection
1½"	■ Thread G 1½“, PP ■ Thread MNPT 1½“ - 11.5
2"	■ Thread 2", PP ■ Thread MNPT 2" - 11.5

Materials

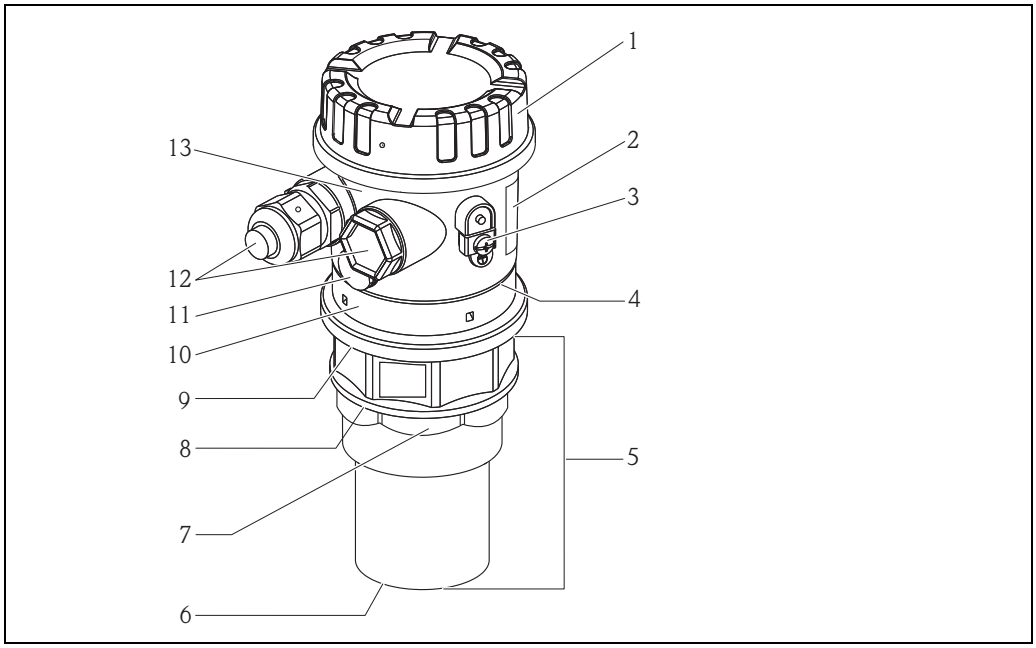

L00-FMU3xxxx-16-00-00-xx-001

Pos.	Part	Material
1	Cover (grey)	PBT
	Cover (transparent)	PA
	O-ring	EPDM
2	Ground terminal: Screws Spring washer Clamp Holder	 A2 A4 304 (1.4301) 301 (1.4310)
3	Nameplate	Polyester
4	O-ring	EPDM
5	Sensor (in contact with process)	PP
6	Matching Layer (in contact with process)	EPDM
7	Counter nut (in contact with process)	PC
8	Sealing (in contact with process)	EPDM
9	Sealing	EPDM
10	Adapter of housing	PBT GF 30-FR
11	Goretex filter	PBT-20GF / grey RAL7035
12	Cable gland	Polyamid (PA)
	Plug	PBT-GF30
13	Housing	PBT-FR

Note!
The chemical compatibility of the sensors must be checked before installation with compatibility charts.

Operability

Display and operating elements

The LCD module for display and operation is located beneath the housing cover. Open the cover to operate the device.

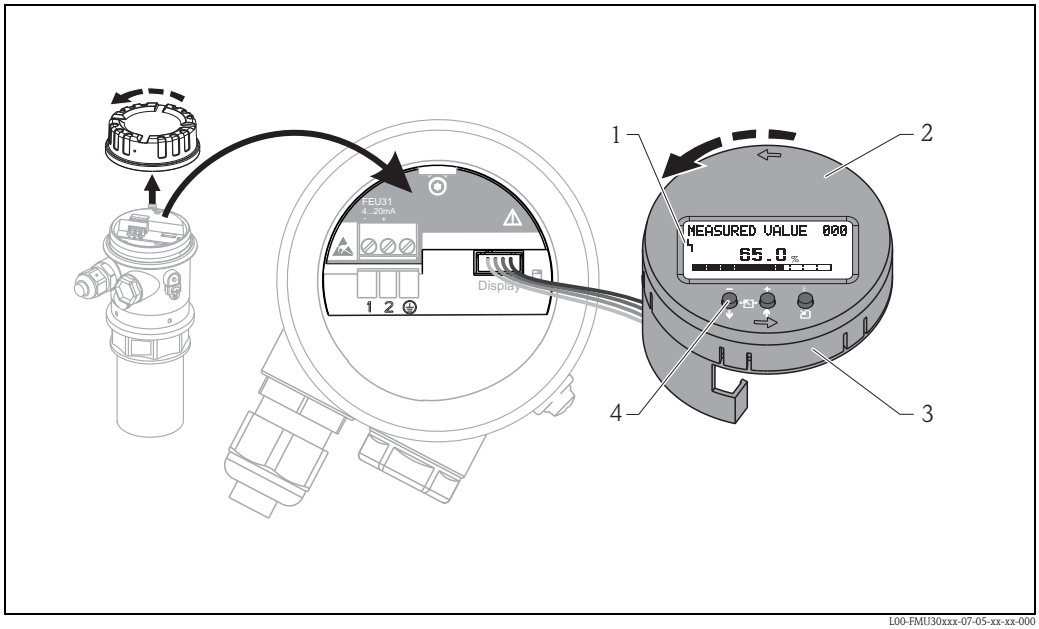

L00-FMU30xxx-07-05-xx-xx-000

1 Display symbol
2 Display (rotatable)
3 Plug-in module
4 Function keys

Symbol in display			
	continuous	flashing	
Meaning	Alarm	Warning	Security Locking

Function of the keys

Key(s) (The keys to press are displayed in grey.)	**Meaning**
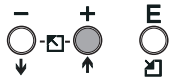	Navigate upwards in the selection list Edit numeric value within a function
	Navigate downwards in the selection list Edit numeric value within a function
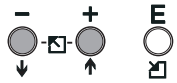	Navigate to the left within a function group
	Navigate to the right within a function group, confirmation.
 or 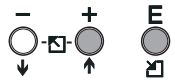	Contrast settings of the LCD
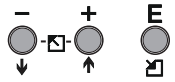	Hardware lock / unlock After a hardware lock, an operation of the instrument via display or communication is not possible! The hardware can only be unlocked via the display. An unlock parameter must be entered to do so (unlock parameter: 100).

On-site operation

Operation

The LC-Display allows configuration via 3 keys directly at the instrument. All device functions can be set through a menu system. The menu consists of function groups and functions. Within a function, application parameters can be read or adjusted. The user is guided through a complete configuration procedure. For ease operation can choose between 7 language: (de: german; en: english; es: spanish; fr: french; it: italian; ja: japanese; nl: dutch).

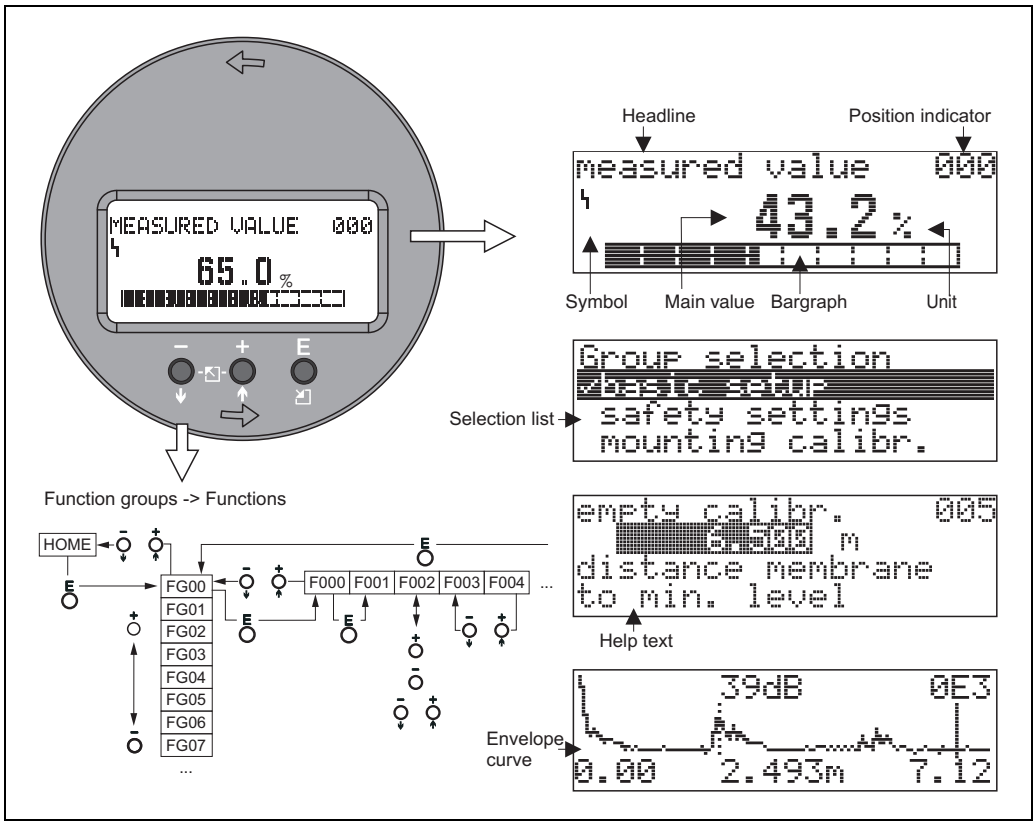

L00-FMU30xxx-07-00-00-en-004

Remote operation

Operation with FieldCare

FieldCare is Endress+Hauser's FDT based Plant Asset Management Tool. It can configure all intelligent field devices in your plant and supports you in managing them. By using status information, it also provides a simple but effective means of checking their health.

- Supports Ethernet, HART, PROFIBUS PA, FOUNDATION Fieldbus etc.
- Operates all Endress+Hauser devices
- Operates all third-party actuators, I/O systems and sensors supporting the FDT standard
- Ensures full functionality for all devices with DTMs
- Offers generic profile operation for any third-party fieldbus device that does not have a vendor DTM

Connection for FMU30:
- Commubox FXA291 and ToF adapter FXA291 (available as accessory)

Using the following functions:
- Signal analysis via envelope curve
- Linearization table (graphically supported creation, editing, importing and exporting)
- Loading and saving of instrument data (Upload/Download)
- Documentation of measuring point

Menu-guided commissioning:

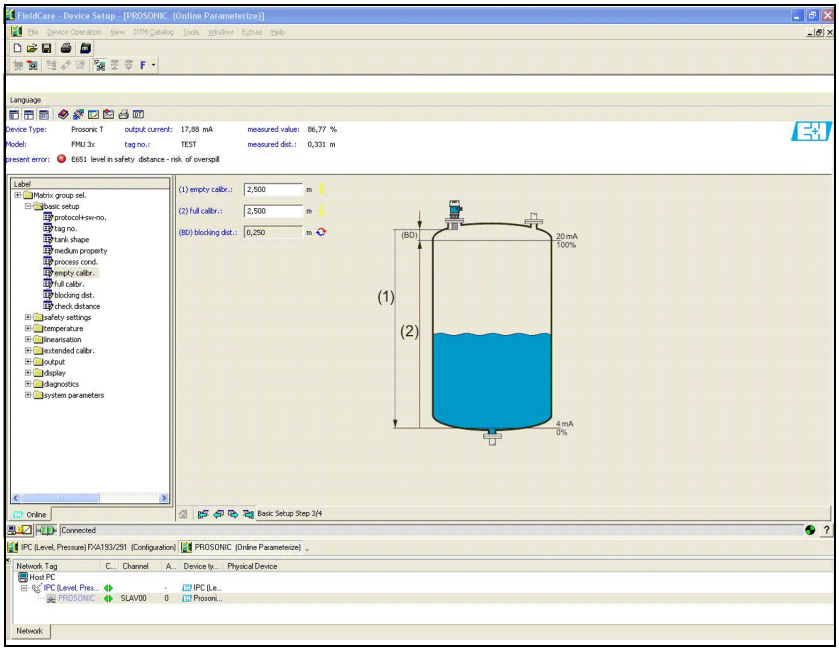

Signal analysis via envelope curve:

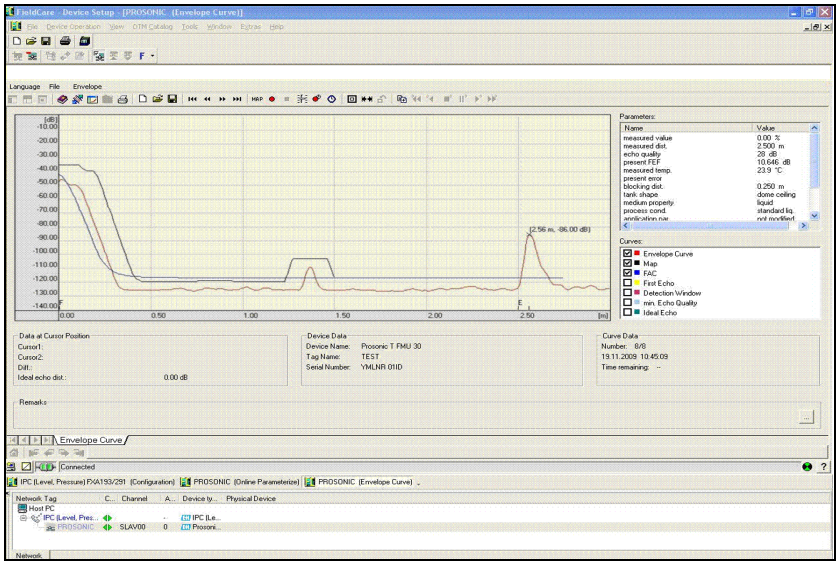

Certificates and Approvals

CE mark

The measuring system meets the legal requirements of the EC-guidelines. Endress+Hauser confirms the instrument passing the required tests by attaching the CE-mark.

Ex approvals

- ATEX
- IECEx
- CSA C/US
- NEPSI

Additional safety instructions must be observed for applications in hazardous areas. They arecontained in the separate "Safety Instructions" (XA) document, which is included in the scope ofdelivery. Reference is made to the XA on the nameplate of the device.

Note!
Details on the available certificats as well as the associated XAs can be found in the Associated documentation chapter documentation → 27.

Ex approval

The available certificates are listed in the ordering information. Note the associated safety instructions (XA) and control or installation drawings (ZD).

External standards and guidelines

EN 60529

Protection class of housing (IP-code)

EN 61326 series

EMC product family standard for electrical equipment for measurement, control and laboratory use

NAMUR

User association for automation technology in process industries

Ordering information

FMU30

Versions that mutually exclude one another are not marked.

010	**Approval:**	
	AA	Non-hazardous area
	BB	ATEX II 1/2G Ex ia IIC T5
	CA	CSA C/US General Purpose
	CB	CSA C/US IS CI.I Div.1 Gr.A-D
	IB	IEC Ex zone 0/1, Ex ia IIC T5 Ga/Gb
	NB	NEPSI zone 0/1, Ex ia IIC T5 Ga/Gb
	99	Special version
020	**Display; Operating:**	
	G	W/o; via spare part display FMU30
	H	Envelope curve display on site; push button
	Y	Special version
030	**Electrical Connection:**	
	E	Gland M20, IP68
	F	Thread G1/2, IP68
	G	Thread NPT1/2, IP68
	Y	Special version
040	**Sensor; Max Range; Blocking Distance:**	
	AA	1-1/2"; 5m liquid/2m solid; 0.25m
	AB	2"; 8m liquid/3.5m solid; 0.35m
	YY	Special version
050	**Process Connection:**	
	GGF	Thread ISO228 G1-1/2, PP
	GHF	Thread ISO228 G2, PP
	RGF	Thread ANSI MNPT1-1/2, PP
	RHF	Thread ANSI MNPT2, PP
	YYY	Special version
620	**Accessory Enclosed:**	
	RA	UNI flange 2"/DN50/50, PP max 4bar abs/58psia, suitable for 2" 150lbs/DN50 PN16/10K 50
	RB	UNI flange 2"/DN50/50, PVDF max 4bar abs/58psia, suitable for 2" 150lbs/DN50 PN16/10K 50
	RC	UNI flange 2"/DN50/50, 316L max 4bar abs/58psia, suitable for 2" 150lbs/DN50 PN16/10K 50
	RD	UNI flange 3"/DN80/80, PP max 4bar abs/58psia, suitable for 3" 150lbs/DN80 PN16/10K 80
	RE	UNI flange 3"/DN80/80, PVDF max 4bar abs/58psia, suitable for 3" 150lbs/DN80 PN16/10K 80
	RF	UNI flange 3"/DN80/80, 316L max 4bar abs/58psia, suitable for 3" 150lbs/DN80 PN16/10K 80
	RG	UNI flange 4"/DN100/100, PP max 4bar abs/58psia, suitable for 4" 150lbs/DN100 PN16/10K 100
	RH	UNI flange 4"/DN100/100, PVDF max 4bar abs/58psia, suitable for 4" 150lbs/DN100 PN16/10K 100
	RI	UNI flange 4"/DN100/100, 316L max 4bar abs/58psia, suitable for 4" 150lbs/DN100 PN16/10K 100
	R9	Special version
895	**Marking**:	
	Z1	Tagging (TAG), see additional spec.

You can enter the versions for the specific feature in the following table. The versions entered make up the complete order code. Options which are mutually exclucive are not marked.

	010	020	030	040	050	620	895
FMU30 -							

Endress+Hauser supplies DIN/EN flanges made of stainless steel AISI 316L with the material number 1.4404 or 1.4435. With regard to their temperature stability properties, the materials 1.4404 and 1.4435 are grouped under 13E0 in EN 1092-1 Tab. 18. The chemical composition of the two materials can be identical.

Scope of delivery

- Instrument according to the version ordered
- Short instructions KA01054F; additional documentations on the supplied CD-ROM
- For certified instrument versions: Safety Instructions, Control- or Installation drawings
- Counter nut (PC): option 50, versions GGF/GHF, → 📄 21 "Ordering information"
- Sealing ring (EPDM): option 50, versions GGF/GHF → 📄 21 "Ordering information"
- For gland M20x1.5: 1 cable gland for 2-wire instruments
  The cable gland is mounted on delivery.

Accessories

Installation bracket

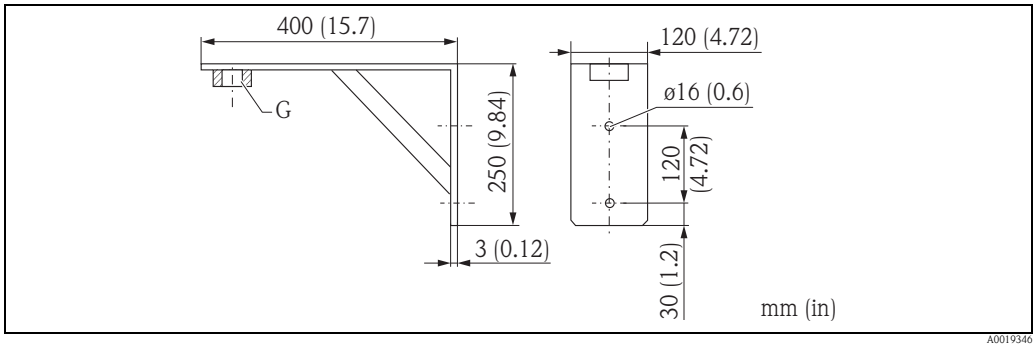

Process connection	Order No.	Material	Weight
G 1½"	942669-0000	316 Ti (1.4571)	3.4 kg (7.5 lbs)
G 2"	942669-0001		

suited for NPT 1½" and 2" as well

Screw in flange

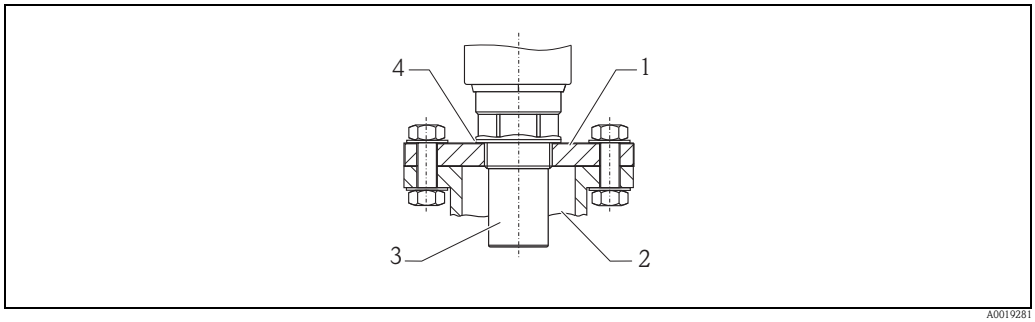

1 Screw in flange
2 Nozzle
3 Sensor
4 Sealing ring EPDM (supplied)

Screw in flange FAX50

015	Material:	
	BR1	DN50 PN10/16 A, steel flange EN1092-1
	BS1	DN80 PN10/16 A, steel flange EN1092-1
	BT1	DN100 PN10/16 A, steel flange EN1092-1
	JF1	2" 150lbs FF, steel flange ANSI B16.5
	JG1	3" 150lbs FF, steel flange ANSI B16.5
	JH1	4" 150lbs FF, steel flange ANSI B16.5
	JK2	8" 150lbs FF, PP max 3bar abs/44psia flange ANSI B16.5
	XIF	UNI flange 2"/DN50/50, PVDF max 4bar abs/58psia, suitable for 2" 150lbs/DN50 PN16/10K 50
	XIG	UNI flange 2"/DN50/50, PP max 4bar abs/58psia, suitable for 2" 150lbs/DN50 PN16/10K 50
	XIJ	UNI flange 2"/DN50/50, 316L max 4bar abs/58psia, suitable for 2" 150lbs/DN50 PN16/10K 50
	XJF	UNI flange 3"/DN80/80, PVDF max 4bar abs/58psia, suitable for 3" 150lbs/DN80 PN16/10K 80
	XJG	UNI flange 3"/DN80/80, PP max 4bar abs/58psia, suitable for 3" 150lbs/DN80 PN16/10K 80
	XJJ	UNI flange 3"/DN80/80, 316L max 4bar abs/58psia, suitable for 3" 150lbs/DN80 PN16/10K 80
	XKF	UNI flange 4"/DN100/100, PVDF max 4bar abs/58psia, suitable for 4" 150lbs/DN100 PN16/10K 100
	XKG	UNI flange 4"/DN100/100, PP max 4bar abs/58psia, suitable for 4" 150lbs/DN100 PN16/10K 100
	XKJ	UNI flange 4"/DN100/100, 316L max 4bar abs/58psia, suitable for 4" 150lbs/DN100 PN16/10K 100
	XLF	UNI flange 6"/DN150/150, PVDF max 4bar abs/58psia, suitable for 6" 150lbs/DN150 PN16/10K 150
	XLG	UNI flange 6"/DN150/150, PP max 4bar abs/58psia, suitable for 6" 150lbs/DN150 PN16/10K 150
	XLJ	UNI flange 6"/DN150/150, 316L max 4bar abs/58psia, suitable for 6" 150lbs/DN150 PN16/10K 150
	XMG	UNI flange DN200/200, PP max 4bar abs/58psia, suitable for DN200 PN16/10K 200
	XNG	UNI flange DN250/250, PP max 4bar abs/58psia, suitable for DN250 PN16/10K 250
	YYY	Special version

020	Sensor Connection:	
	A	Thread ISO228 G3/4
	B	Thread ISO228 G1
	C	Thread ISO228 G1-1/2
	D	Thread ISO228 G2
	E	Thread ANSI NPT3/4
	F	Thread ANSI NPT1
	G	Thread ANSI NPT1-1/2
	H	Thread ANSI NPT2
	Y	Special version

The filled in options result in the complete order code.

	015	020
FAX50 -		

For more information, see the documentation TI00426F/00/EN.

Cantilever with mounting frame or wall bracket

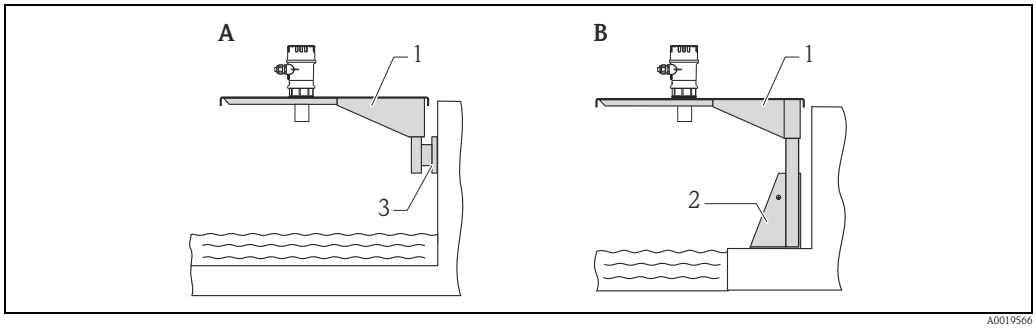

A *Installation with cantilever and wall bracket*
B *Installation with cantilever and mounting frame*
1 Cantilever
2 Mounting frame
3 Wall bracket

Cantilever

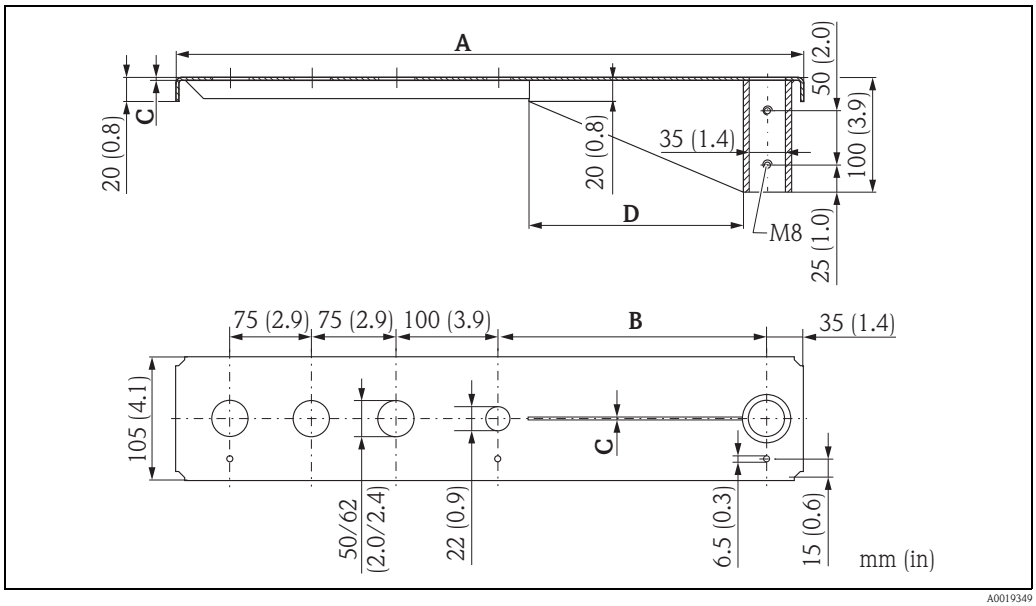

A	B	C	D	Weight	Sensor	Material	Order Code
585 (23)	250 (9.84)	2 (0.08)	200 (7.87)	1.9 kg (4.19 lbs)	1½"	316Ti (1.4571)	52014132
						galv. steel	52014131
					2"	316Ti (1.4571)	52014136
						galv. steel	52014135
1085 (42.7)	750 (29.5)	3 (0.12)	300 (11.8)	4.4 kg (9.7 lbs)	1½"	316Ti (1.4571)	52014134
						galv. steel	52014133
					2"	316Ti (1.4571)	52014138
						galv. steel	52014137

mm (in)

- The 50 mm (2.17 in) or 62 mm (2.44 in) orifices serve for the mounting of the 1½" or 2" sensor, respecitvely.
- The 22 mm (0.87 in) orifice may be used for an additional sensor.

Fixing screws are supplied.

Mounting Frame

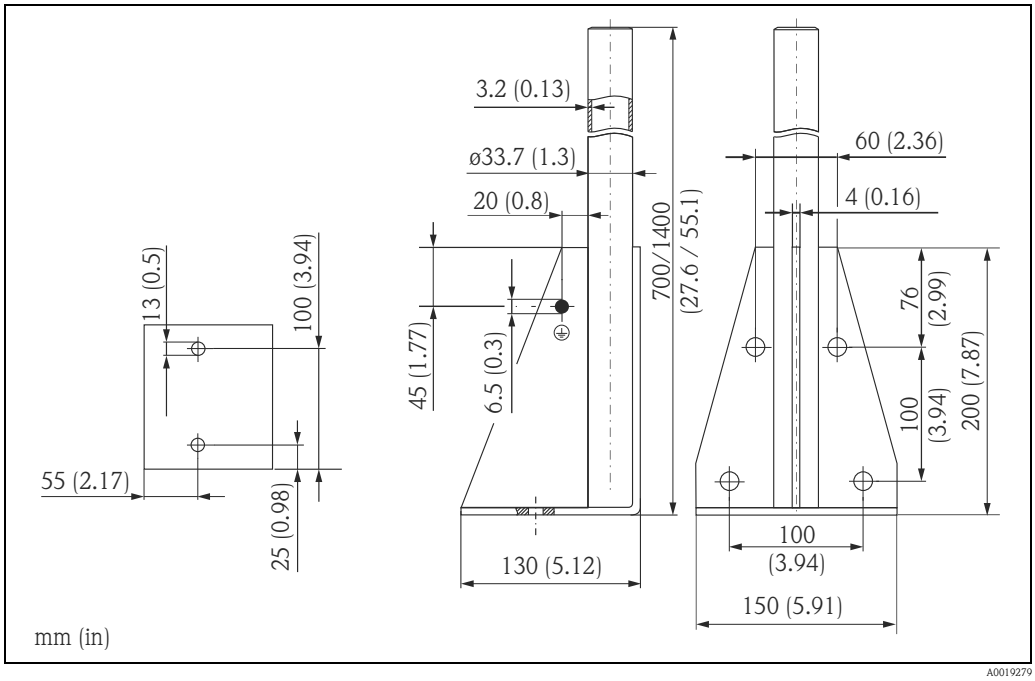

Height	Material	Weight	Order Code
700 (27.6)	galv. steel	3.2 kg (7.06 lbs)	919791-0000
700 (27.6)	316Ti (1.4571)		919791-0001
1400 (55.1)	galv. steel	4.9 kg (10.08 lbs)	919791-0002
1400 (55.1)	316Ti (1.4571)		919791-0003

mm (in)

Wall Bracket

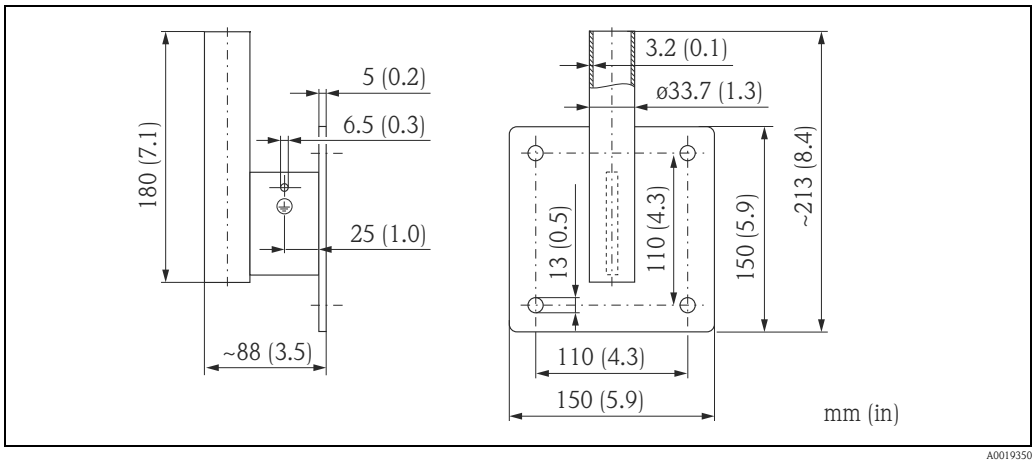

Material	Weight	Order Code
galv. steel	1.4 kg (3.09 lbs)	919792-0000
316Ti (1.4571)		919792-0001

Weather protection cover

A Weather protection cover is recommended for outdoor mounting.

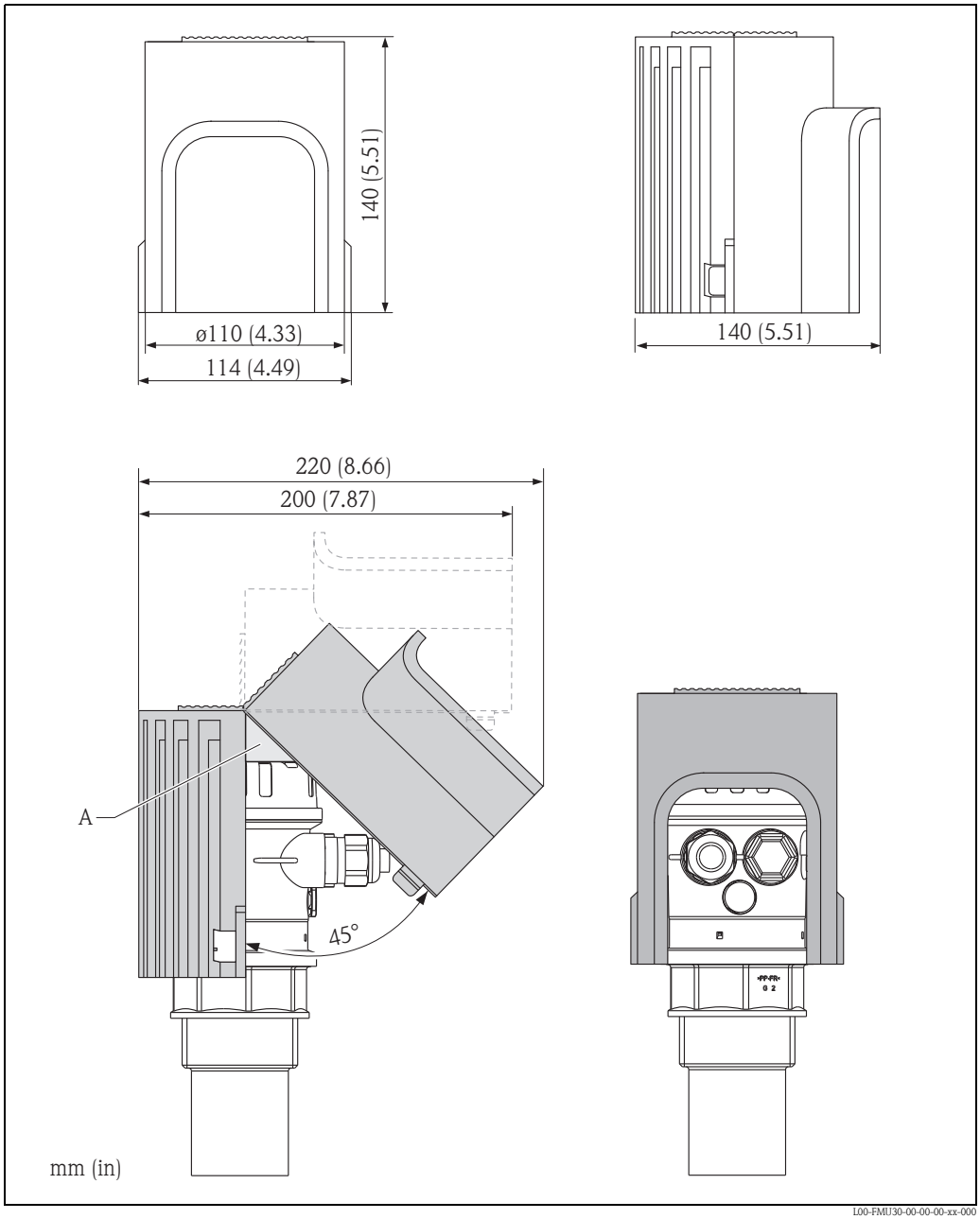

A Foam pad

Material	Order No.	Weight	Operating conditions
PBT, grey	71127762	240 g (8.46 oz)	–50 °C to +150 °C (–58 °F to +302 °F)

Commubox FXA291

The Commubox FXA291 connects Endress+Hauser field instruments via the service interface to the USB interface of a personal computer or a notebook. For details refer to TI00405C/07/EN.

Note!
For the FMU30 you need the "ToF Adapter FXA291" as an additional accessory.

ToF Adapter FXA291

The ToF Adapter FXA291 connects the Commubox FXA291 via the USB interface of a personal computer or a notebook to the FMU30.
For details refer to KA00271F/00/A2.

Documentation

Operating manual

BA00387F

This instruction describe the installation and first commissioning of the instrument. From the operating menu, all functions are included, which are required for standard measurement tasks. Additional functions are not contained in the manual.
The documentation can be found on the supplied documentation CD. The documentation is also available via the Internet → siehe: www.endress.com → Download.

Description of device functions

BA00388F

This contains a detailed description of all the functions of the isntrument and is valid for all communication variants.
The documentation can be found on the supplied documentation CD. The documentation is also available via the Internet → www.endress.com → Download.

Short instructions

KA01054F

is for rapid commissioning of the device. The instructions are attached to the device. The documentation can be found on the supplied documentation CD.
The documentation is also available via the Internet → www.endress.com → Download.

KA00290F

can be found under the device housing cover.
The most important menu functions are summarised on this sheet. It is intended primarily as a memory jogger for users who are familiar with the operating concept of Endress+Hauser time-of-flight instruments.

Safety Instructions

Depending on the approval, the following Safety Instructions (XA) are supplied with the device. They are an integral part of the Operating Instructions.

Certificate/type of protection	Documentation	Order code	
		Feature	Version
ATEX II 1/2 G Ex ia IIC T5 Ga/Gb	XA01054F	10	BB
IECEx, Ex ia IIC T5 Ga/Gb			CB
Ex ia Class I, Division 1, Group A-D, T5 Class I, Zone 0, AEx/Ex ia IIC T5 Ga	XA01080F		IB
NEPSI Zone 0/1, Ex ia IIC T5 Ga/Gb	XA01264F		NB

For certified devices the relevant Safety Instructions (XA) are indicated on the nameplate.

Instruments International

Endress+Hauser
Instruments International AG
Kaegenstrasse 2
4153 Reinach
Switzerland

Tel.+41 61 715 81 00
Fax+41 61 715 25 00
www.endress.com
info@ii.endress.com

Endress+Hauser

People for Process Automation

TI00440F/00/EN/15.14
71225633
SGML+FM10

71225633