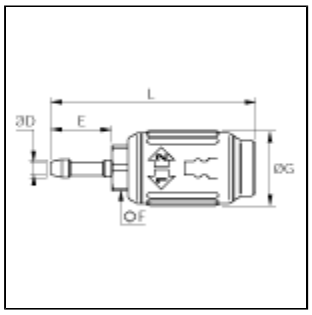

421U
BODY WITH HOSETAIL
for metric tubing

legris connectic	DN (mm)	Flow Rate (l/min)	ØD (mm)	E (mm)	F (mm)	ØG (mm)	L (mm)	(kg)
9421U06 06	5,5	1250	6	26,0	17,0	31,5	88,5	0,070
9421U06 08	5,5	1250	8	26,0	17,0	31,5	88,5	0,070
9421U06 10	5,5	1250	10	26,0	17,0	31,5	88,5	0,070
9421U08 08	8,0	2250	8	26,0	22,0	36,5	95,0	0,100
9421U08 10	8,0	2250	10	26,0	22,0	36,5	95,0	0,124
9421U08 13	8,0	2250	13	30,0	22,0	36,5	99,0	0,125



421U
BODY WITH HOSETAIL

maximum working pressure	**bar** 16	**MPa** 1,6	**psi** 232
working temperature	**°C** **(Celsius)** From -20 to 60	**F** **(Farenheit)** From -4 to 140	**K** **(Kelvin)** From 253 to 333

ball	stainless steel
body	engineering grade polymer
sub-base	nickel-plated brass
'O'-rings	nitrile
spring	stainless steel