G3VM-□MT

MOS FET Relay Module

1 pA max. leakage current* contributes to high device reliability

- Equipped with a T-switch function to achieve fA-level minimal leakage current and contributes to measurement performance equivalent to conventional reed relays
- Contact form: 1a (SPST-NO) + T-switch function
- Contributes to reduction of the mounting space on the printed circuit board with a small package

✻ V_{OFF} = 20 V, 50 V, 80 V

RoHS Compliant

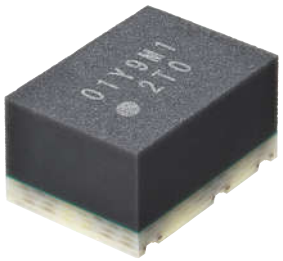

■Application Example

- Semiconductor test equipment

■Package (Unit: mm)

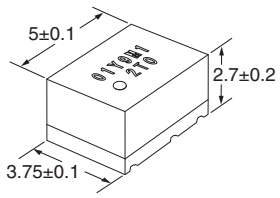

■Model Number Legend

G3VM-□ □ □ □
1 2 3 4

1. Load voltage
2: 20 V
6: 60 V
10: 100 V

2. Contact form
1: 1a (SPST-NO)
Note: See Device Function Modes on page 5.

3. Package
M: MOS FET Relay Module

4. Special function
T: T switch function

■Ordering Information

Package	Contact form	Terminals	Load voltage (peak value) ✻	Continuous load current (peak value) ✻		Tape cut packaging		Tape packaging	
				Main	Sub	Model	Minimum package quantity	Model	Minimum package quantity
Module	1a (SPST-NO)	Surface-mounting Terminals	20 V	200 mA		G3VM-21MT	1 pc.	G3VM-21MT (TR01)	100 pcs.
			60 V	800 mA	400 mA	G3VM-61MT		G3VM-61MT (TR01)	
			100 V	550 mA		G3VM-101MT		G3VM-101MT (TR01)	

Note: 1. To order tape packaging for relays with surface-mounting terminals, add "(TR01)" to the end of the model number. Tape-cut packaging is packaged without humidity resistance. Use manual soldering to mount them.
Note: 2. 500 pcs./reel packing is also available. Please contact your OMRON sales representative.
✻ The AC peak and DC values are given for the load voltage and continuous load current.

Absolute Maximum Rating (Ta = 25°C)

Item		Symbol	G3VM-21MT	G3VM-61MT	G3VM-101MT	Unit	Measurement conditions
Input	LED forward current for main control	$I_{F\ Main}$	30			mA	
	LED forward current for sub control	$I_{F\ Sub}$	30			mA	
	LED forward current reduction rate	ΔI_F/°C	-0.3			mA/°C	Ta ≥ 25°C
	LED reverse voltage	V_R	5			V	
	Junction temperature	Tj	125			°C	
Output	Load voltage (AC peak/DC)	V_{OFF}	20	60	100	V	
	Continuous load current (ACpeak/DC)	$I_{O\ Main}$	200	800	550	mA	
		$I_{O\ Sub}$		400			
	ON current reduction rate	$\Delta I_{O\ Main}$/°C	-2	-8	-5.5	mA/°C	Ta ≥ 25°C
		$\Delta I_{O\ Sub}$/°C		-4			
	Pulse ON current	I_{OP}	600	2400	1650	mA	t=100 ms, Duty=1/10
	Junction temperature	Tj	125			°C	
Dielectric strength between I/O ✻		V_{I-O}	500			Vrms	AC for 1 min
Ambient operating temperature		T_a	-40 to 110			°C	With no icing or condensation
Ambient storage temperature		T_{stg}	-40 to 125			°C	
Soldering temperature		-	260			°C	10 s

Note: The product structure is sensitive to static electricity. When handling it, be sure to take measures against static electricity for the workbench, workers, soldering iron, and soldered mounted devices.

✻ The dielectric strength between the input and output was checked by applying voltage between all pins as a group on the input (LED) side and all pins as a group on the output side (MOSFET).

■Electrical Characteristics (Ta=25°C)

Item		Symbol		G3VM-21MT	G3VM-61MT	G3VM-101MT	Unit	Measurement conditions
Input	LED forward voltage for main control	$V_{F\ Main}$	Minimum	2.2			V	$I_{F\ Main}$=10 mA
			Typical	2.54	2.42			
			Maximum	2.8				
	LED forward voltage for sub control	$V_{F\ Sub}$	Minimum	1.1				$I_{F\ Sub}$=10 mA
			Typical	1.27	1.21			
			Maximum	1.4				
	Capacitance between main control terminals	$C_{T\ Main}$	Typical	15			pF	V=0, f=1 MHz
	Capacitance between sub control terminals	$C_{T\ Sub}$	Typical	30				
	Trigger LED forward current	$I_{FT\ Main/Sub}$	Maximum	3			mA	I_O=100 mA
	Release LED forward current	$I_{FC\ Main/Sub}$	Minimum	0.1				I_{OFF}=10 uA
Output	Maximum resistance with output ON	$R_{ON\ Main}$	Typical	8	0.4	0.8	Ω	$I_{F\ Main}$=5 mA, t<1 s $I_{O\ Main}$=Continuous load current rated value
			Maximum	12	0.8	1.5		
	Current leakage when the main line is open and sub line is close ✻1	I_{LEAK}	Maximum	1			pA	G3VM-21MT: V_{DD}=20 V G3VM-61MT: V_{DD}=50 V G3VM-101MT: V_{DD}=80 V ✻1
	Capacitance between terminals	C_{OFF}	Typical	0.6	38	23	pF	V=0, f=1 MHz
			Maximum	1	-			
Capacitance between I/O terminals		C_{I-O}	Typical	1				
Insulation resistance between I/O terminals		R_{I-O}	Minimum	1000			MΩ	V_{I-O}=500 VDC, RoH ≤ 60%
			Typical	10^8				
Main line Turn-ON time		$t_{ON\ Main}$	Typical	-	0.75	0.6	ms	G3VM-21MT: V_{DD}=10V, G3VM-61MT/101MT: V_{DD}=20V, $I_{F\ Main}$=5 mA, R_L=200 Ω ✻2
			Maximum	0.3	2.5			
Main line Turn-OFF time		$t_{OFF\ Main}$	Typical	-	0.04			
			Maximum	0.3	0.5			
Sub line Turn-ON time		$t_{ON\ Sub}$	Typical	-	0.2	0.6		G3VM-21MT: V_{DD}=10V, G3VM-61MT/101MT: V_{DD}=20V, $I_{F\ Main}$=5 mA, $I_{F\ Sub}$=5 mA, R_L=200 Ω ✻3
			Maximum	0.3	1	2.5		
Sub line Turn-OFF time		$t_{OFF\ Sub}$	Typical	-	0.04			
			Maximum	0.3	0.5			

✻1. I_{LEAK} measurement condition

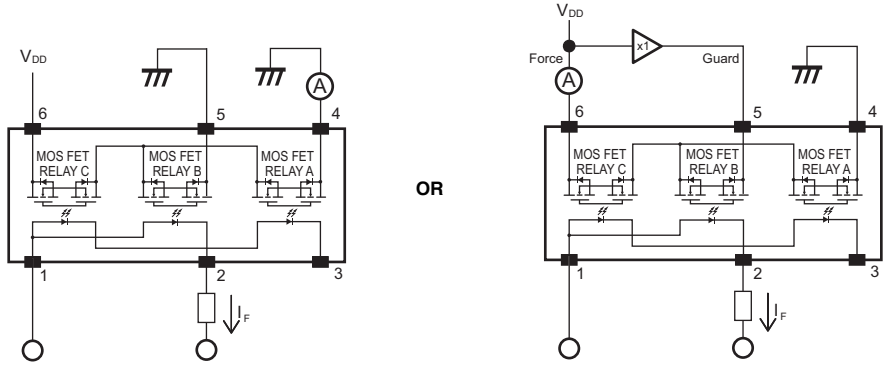

✻2. Turn-ON and Turn-OFF Times (Main line)

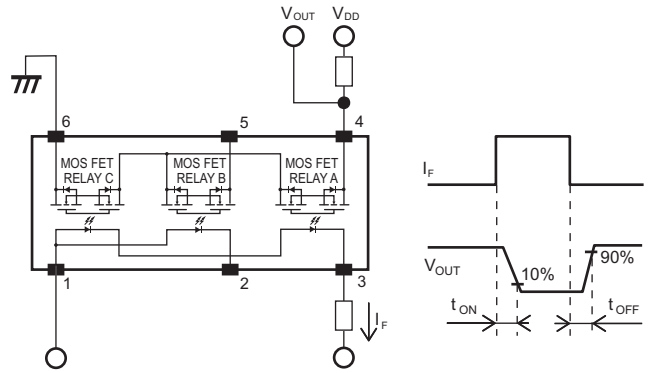

✻3. Turn-ON and Turn-OFF Times (Sub line)

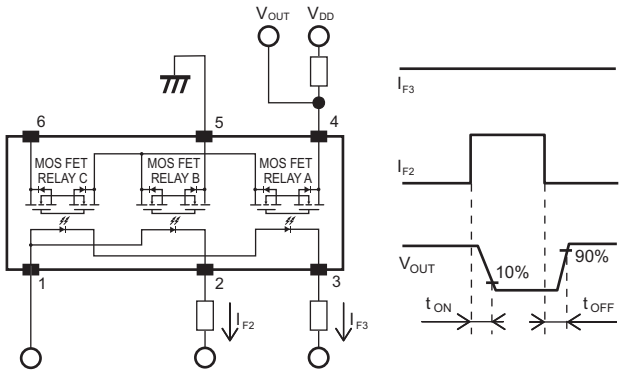

■Recommended Operating Conditions

For usage with high reliability, Recommended Operation Conditions is are measures that take into account the derating of Absolute Maximum Ratings and Electrical Characteristics.
Each item on this list is an independent condition, so it is not simultaneously satisfying conditions.

Item	Symbol		G3VM-21MT	G3VM-61MT	G3VM-101MT	Unit
Load voltage (AC peak/DC)	V_{DD}	Maximum	16	48	80	V
Operating LED forward current	I_F	Minimum	5			mA
		Typical	7.5			
		Maximum	20			
Continuous load current (AC peak/DC)	$I_{O\ Main}$	Maximum	200	800	550	
	$I_{O\ Sub}$			400		
Ambient operating temperature	T_a	Minimum	-20			°C
		Maximum	85			

■Engineering Data

●LED forward current vs. Ambient temperature

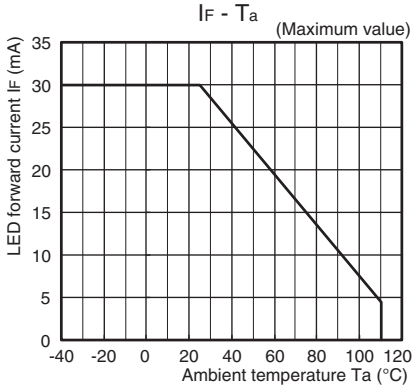

●Continuous load current vs. Ambient temperature

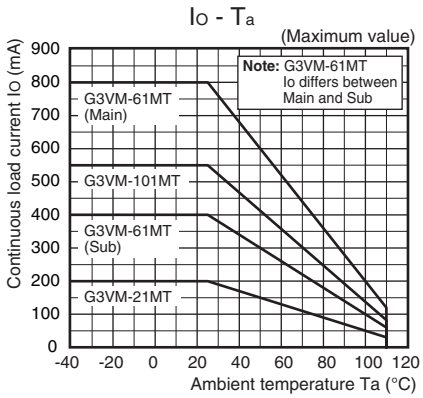

●LED forward current vs. LED forward voltage

G3VM-21MT

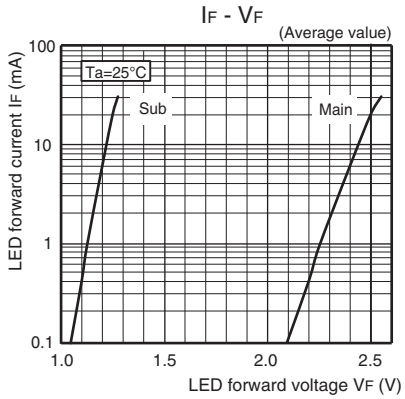

G3VM-61MT

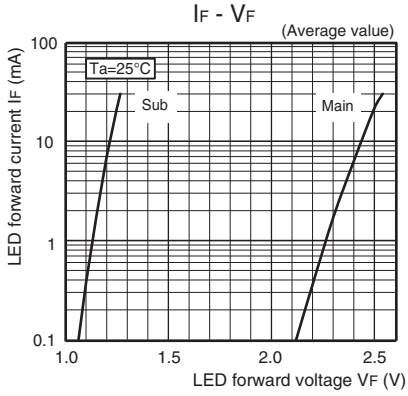

G3VM-101MT

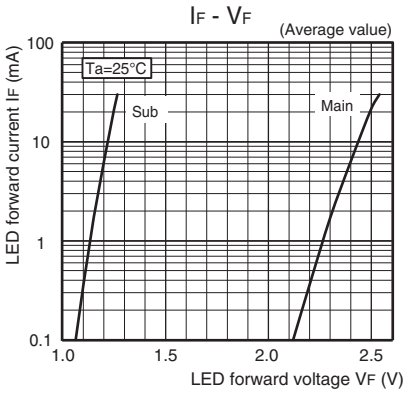

●Continuous load current vs. On-state voltage

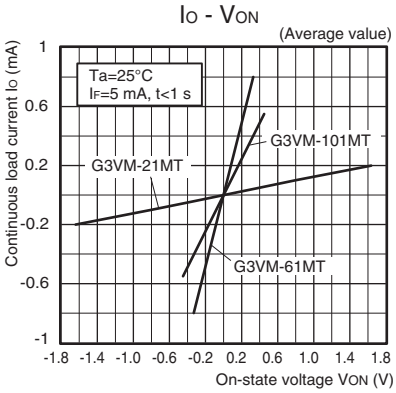

●On-state resistance vs. Ambient temperature

G3VM-21MT

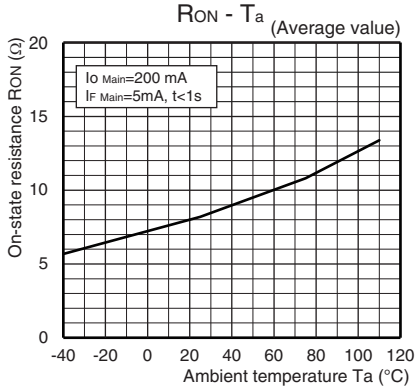

G3VM-61MT/101MT

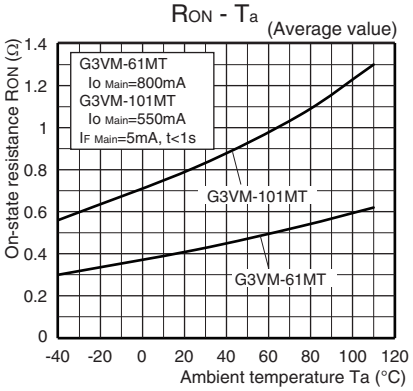

●Trigger LED forward current vs. Ambient temperature

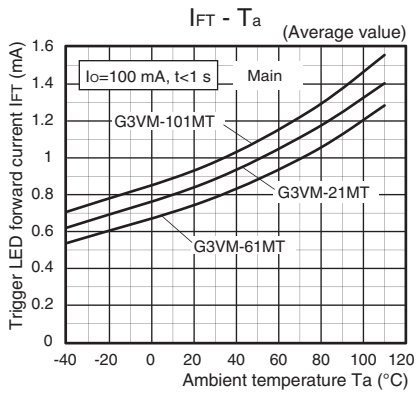

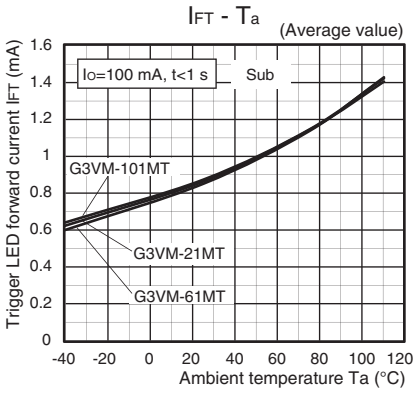

●Turn ON, Turn OFF time vs. LED forward current

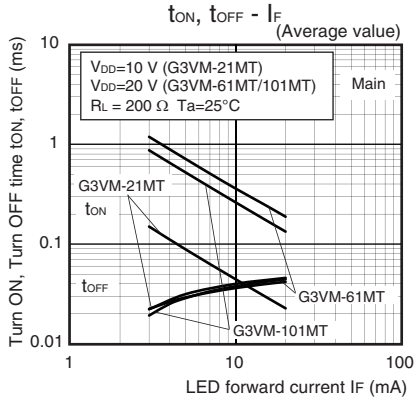

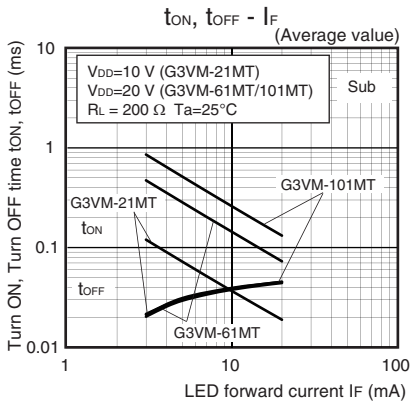

●Current leakage vs. Load voltage

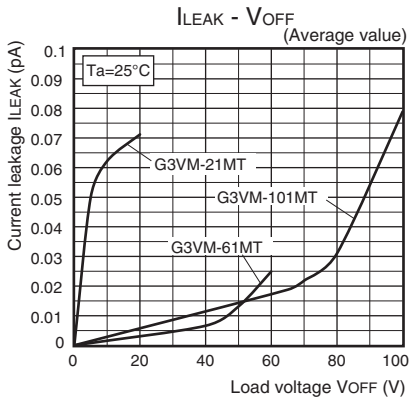

●Turn ON, Turn OFF time vs. Ambient temperature

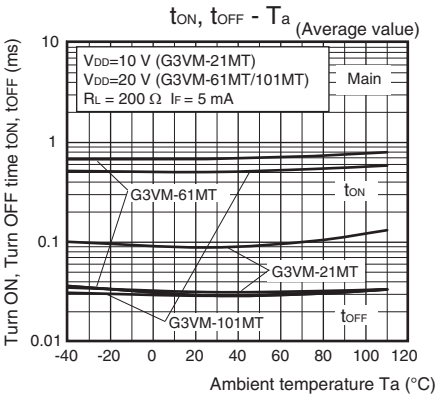

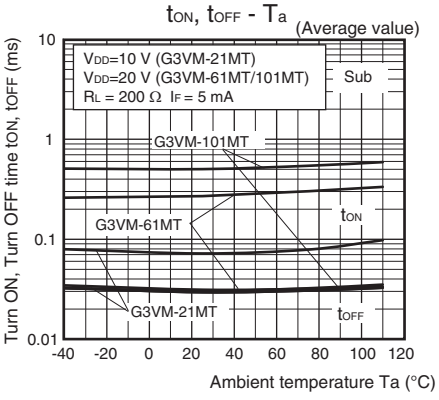

●Current leakage vs. Ambient temperature

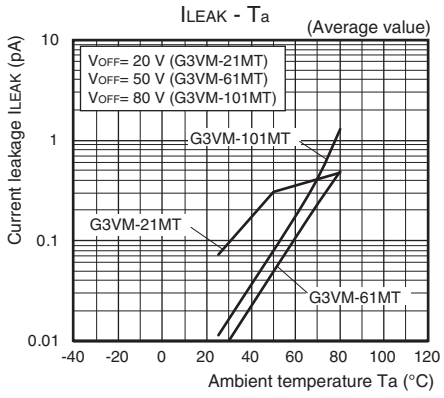

●Output terminal capacitance vs. Load voltage

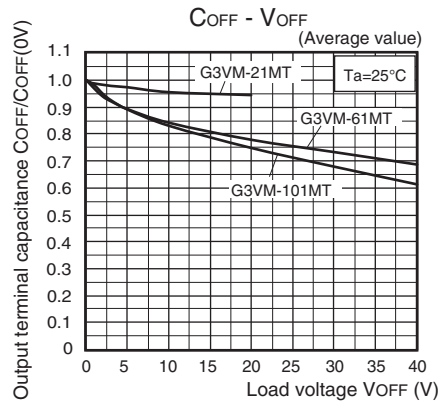

●High-frequency Characteristics (Isolation) ∗1, ∗2

G3VM-21MT

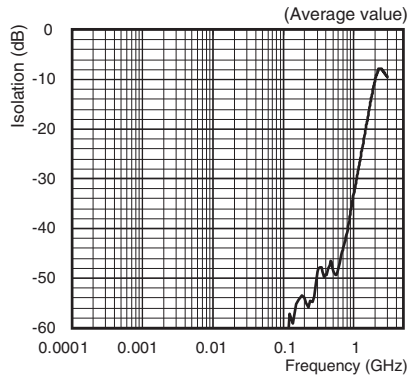

●High-frequency Characteristics (Insertion Loss) ∗1, ∗2

G3VM-21MT

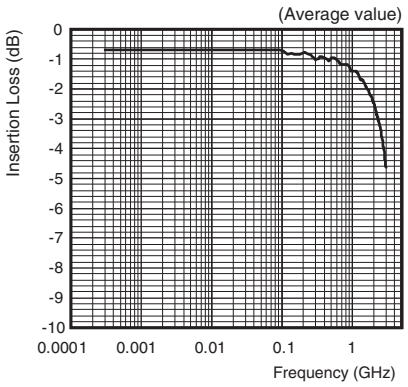

∗1. Ambient temperature condition: 25°C

∗2. The high-frequency characteristics depend on the mounting board. Be sure to check operation in actual equipment before use.

■Connection Example 1

●Device Functional Modes ✻

Circuit	Control	MOS FET RELAY A, C (Main line)	MOS FET RELAY B (Sub line)
ON	H	ON	OFF
OFF	L	OFF	ON
-	X	OFF	OFF

✻ H: Optional setting, L: 0 V, X: don't care

●Timing Diagram

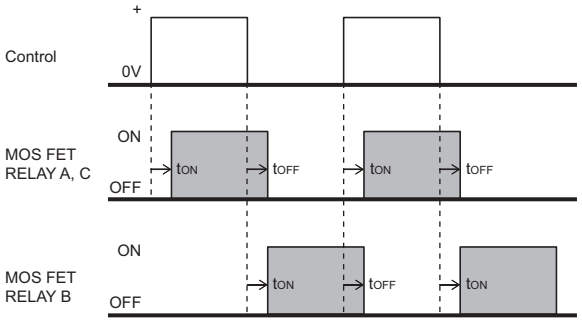

✻ Both MOS FET relay A, C and MOS FET relay B may be ON at the same time. This products is recommended to use with dry switching (No Load & No Source when switching) to prevent short circuiting.

●Measurement Circuit

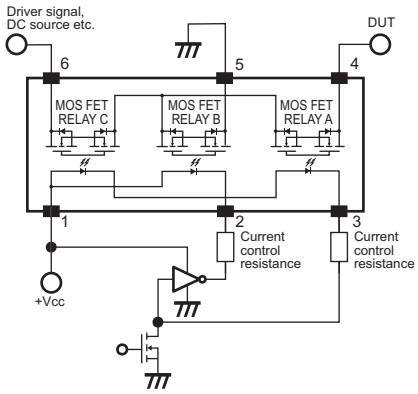

Note: Above image are pin numbers 1-6.

■Connection Example 2

●Device Functional Modes ✻

$I_{F\ Main}$	$I_{F\ Sub}$	MOS FET RELAY A, C (Main line)	MOS FET RELAY B (Sub line)
H	L	ON	OFF
L	H	OFF	ON
L	L	OFF	OFF

●Timing Diagram

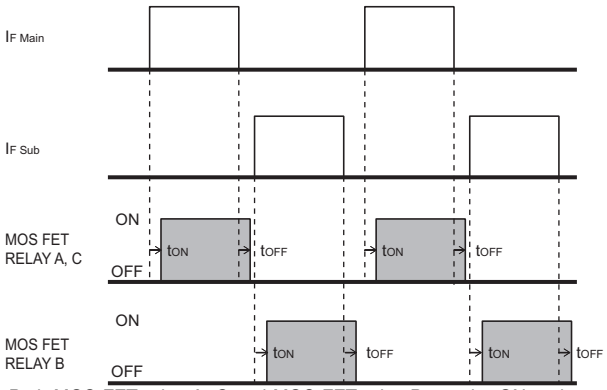

✻ Both MOS FET relay A, C and MOS FET relay B may be ON at the same time. For that reason, even if pins 4, 5 and 6 are all connected, please design the circuit so that equipment damage does not occur.

●Measurement Circuit

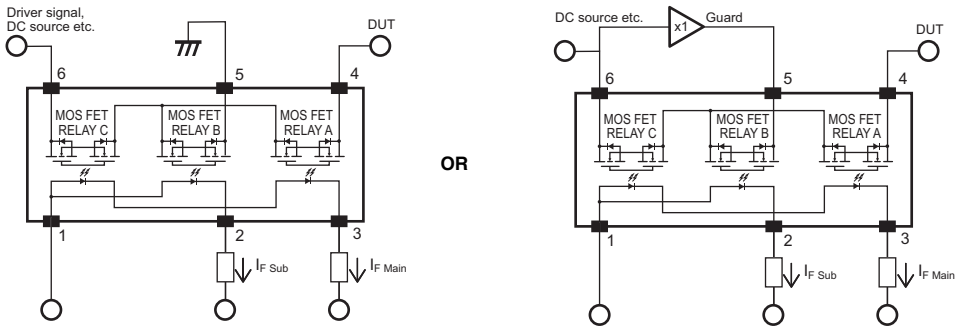

■Appearance / Terminal Arrangement / Internal Connections

●Appearance

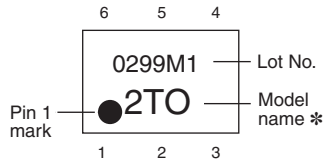

✻ Actual model name marking for each model

Model	Marking
G3VM-21MT	2T0
G3VM-61MT	6T0
G3VM-101MT	AT0

●Terminal Arrangement/Internal Connections (Top view)

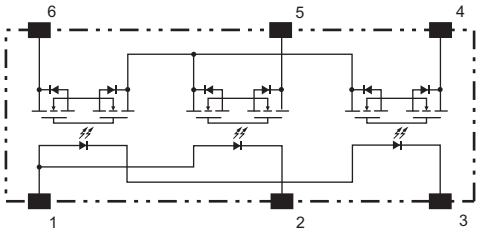

Note 1. The actual product is marked differently from the image shown here.
Note 2. "G3VM" does not appear in the model number on the relay.

■Dimensions

CAD Data Please visit our website, which is noted on the last page.

(Unit: mm)

Surface-Mounting Terminals

Weight: 0.11 g

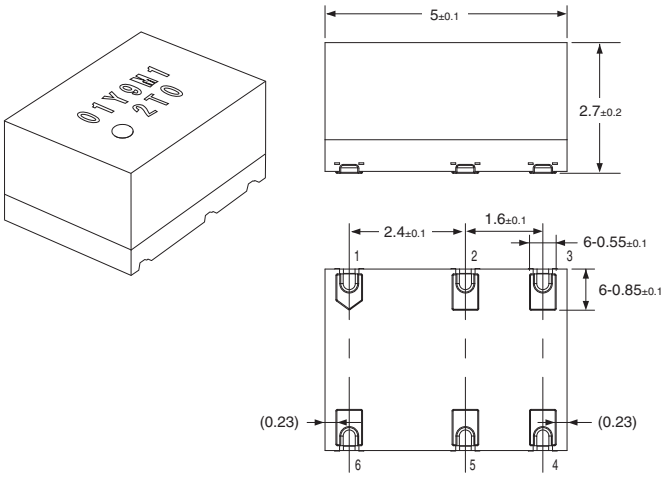

Actual Mounting Pad Dimensions

(Recommended Value, Top view)

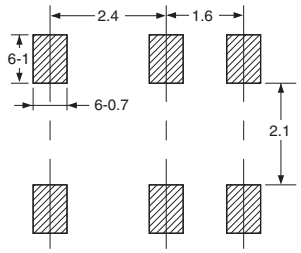

Unless otherwise specified, the dimensional tolerance is ± 0.1 mm.

CAD Data

Note: The actual product is marked differently from the image shown here.

■Safety Precautions

⚠ WARNING

Always turn OFF the power supply before wiring a relay.
Not doing so may cause electrical shock.



Do not touch the current-carrying parts of the pin section of a product while the power is being supplied.
An electrical shock may occur.



Precautions for Safe Use

1. Do not apply overvoltages or overcurrents to the input or output circuits of the product.
   The product may fail or ignite.
2. Perform soldering and wiring correctly according to specified soldering conditions.
   Using a product with incomplete soldering may cause overheating when power is applied, possibly resulting in burning.

Precautions for Correct Use

●Derating

You must consider derating to achieve the required system reliability.

To use a product with high reliability, consider derating the maximum ratings and recommended operating conditions, and allow sufficient leeway in designs based on testing operation in the actual application under the actual operating conditions whenever possible.

(1) Maximum Ratings
The maximum ratings must never be exceeded even instantaneously. This applies individually to each of the ratings. If any of the maximum ratings is exceeded, the internal parts of the product may deteriorate or the chip may be destroyed. To ensure high reliability in using a product, sufficiently derate the maximum voltage, current, and temperature ratings when designing the application.

(2) Recommended Operating Conditions
The recommended operating conditions are to ensure that the product turns ON and OFF reliably.
To ensure high reliability in using a product, consider the recommended operating conditions when you design the application.

(3) Fail-Safe Design
We recommend that you implement fail-safe measures in the design of the application if the failure of, deterioration of characteristics in, or functional errors in the product will have a serious affect on the safe operation of the system.

●Countermeasures for static electricity

There is a risk of damage to internal elements and impairment of functionality if static electricity is discharged to the pins due to product handling or otherwise.
Reduce the generation of static electricity as much as possible, and implement appropriate measures to prevent charge accumulation near the product.

●Typical Product Driving Circuit Examples

The LED input side of the MOS FET is driven by current. If applying a voltage, add resistance in series with the circuit, so the specified current is applied.
This resistance is referred as "LED current limiting resistance."

C-MOS

at MAIN ON/SUB OFF

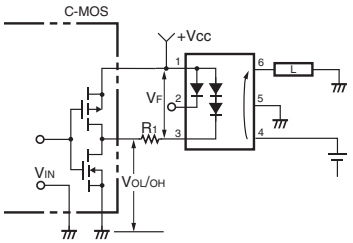

at MAIN OFF/SUB ON

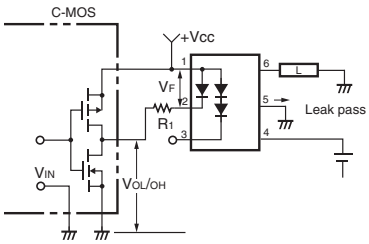

Transistor

at MAIN ON/SUB OFF

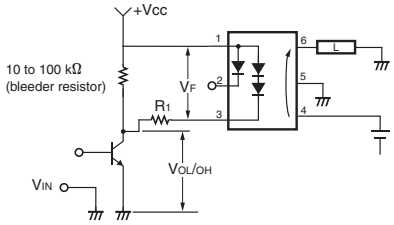

at MAIN OFF/SUB ON

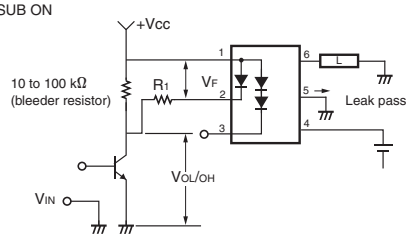

- To ensure that the product operates correctly, use the following formula to calculate the limiting resistance, and design the circuit accordingly.

$$R_1 = \frac{V_{CC} - V_{OL} - V_{F(ON)}}{I_F}$$

Note: To set the value of $I_{F(ON)}$, check the trigger LED current and recommended operation LED forward current indicated in the catalogue for each model, and set a high value with leeway.

- To ensure that the product resets reliably, calculate the reset voltage using the formula below, and control so that the voltage is lower than this value.

$$V_{F(OFF)} = V_{CC} - I_{F(OFF)}R_1 - V_{OH}$$

Note: For the $I_{F(OFF)}$ value, set a value that is lower with leeway than the reset LED forward current indicated for each model in the catalogue.

- If the drive transistor has a large leakage current that may cause malfunctioning, add a bleeder resistance.

●Protection from Surge Voltage on the Input Pins

- If any reversed surge voltage is imposed on the input pins, insert a diode in parallel with the input pins as shown in the following circuit diagram and do not impose a reversed voltage of 3 V or higher.

Surge Voltage Protection Circuit Example

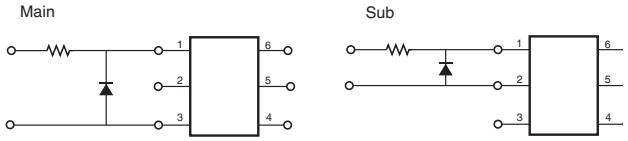

●Protection from Spike Voltage on the Output Pins

- If there is an inductive load or other condition that will cause overvoltage that exceeds the absolute maximum rating between the output pins, connect a protective circuit to limit the overvoltage.

Spike Voltage Protection Circuit Example

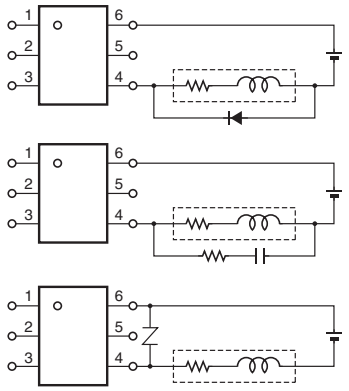

●Load Connection

(1) Do not short-circuit the input and output pins while the product is operating or it may malfunction.
(2) Do not connect the input and output in reverse.
(3) Do not construct a circuit so that overcurrent and burning occur if the 4, 5 and 6 pins are short-circuited.

●Transportation

(1) When transportation and installing the product, do not drop the product or subject it to abnormal vibration or shock. It may cause deterioration of product characteristics, malfunction or failure.
(2) Avoid transportation in the following conditions as it may cause failure or deterioration of characteristics.
- Circumstance subject to water or oil.
- Circumstance subject to high temperature or high humidity.
- Circumstance where the temperature changes radically and condensation occurs.
- State the product is not packed.

●Cleaning Flux from the Products

(1) Clean flux from the product so that there will be no residue of reactive ions, such as sodium or chlorine.
Some organic solvents will react with water to produce hydrogen chloride or other corrosive gases, which may cause deterioration of the products.
(2) When washing off the flux with water, make sure that there will be no residue of reactive ions, particularly sodium or chlorine.
(3) During water washing, do not scrub the marks on the surface of the product with a brush or your hand while there is cleaning liquid on the product. The marks may come off.
(4) Clean the flux from the products with the chemical action of the solvent for submersed cleaning, shower cleaning, or steam cleaning. To minimize the effect on the products, do not place the product in the solvent or steam for more than 1 minute at a temperature of 50°C.
(5) If you use ultrasonic cleaning, keep the time short. If the cleaning time is too long, the sealing characteristics of the molded resin and frame materials may deteriorate.
The recommended basic conditions are given below.
Recommended Conditions for Ultrasonic Cleaning:
Frequency: 27 to 29 kHz
Ultrasonic wave output: 300 W max. (0.25 W/cm^2 max.)
Cleaning time: 30 s max.
Also, suspend the products in the cleaning solution so that the product and PCB do not come into direct contact with the ultrasonic transducer.
(6) Dry thoroughly after washing so that there is no residue of washing liquid.

●Solder Mounting

Perform solder mounting under the following recommended conditions to prevent the temperature of the MOS FET Relays from rising.

(Lead-free solder) SnAgCu recommended profile

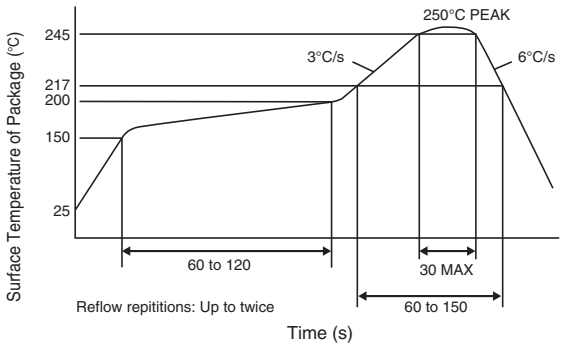

Note 1. We recommend that you verify the suitability of solder mounting under actual conditions.
Note 2. When product is ordered with (TR01), tape package product is delivered in moisture-proof packaging. If ordered without (TR01), tape-cut product is delivered in non moisture-proof packaging. Mount a tape cut product by manual soldering. Tape cut products absorb moisture because a non moisture-proof package is used. Risk of package cracking or other damage due to thermal stress if reflow soldering is performed.

Manual Soldering (Once Only)

Perform manual soldering at 260°C for 10 s or less.

●Storage Conditions

(1) Store the products where they will not be subjected to water leaks or direct sunlight.
(2) When transporting or storing the product, observe all precautions on the packaging boxes.
(3) Keep the storage location at normal temperature, normal humidity, and normal pressure. Guidelines for the temperature and humidity are 5 to 35°C and a relative humidity of 45% to 75%.
(4) Do not store the product in locations that are subject to corrosive gases, such as hydrogen sulfide gas, or to salt spray, and do not store them where there is visually apparent dust, iron powder or dirt.

(5) Store the product in a location that has a relatively stable temperature. Radical changes in temperature during storage will cause condensation, which may oxidize or corrode the leads and interfere with solder wetting.
(6) If you remove products from the packages and then store them again, use storage containers that have measures to prevent static electricity.
(7) Do not under any circumstances apply any force to the products that would deform or alter them in any way.
(8) This product is warranted for one year from the date of purchase or the date of delivery to the specified location.
If the products are stored for more than about one year under normal conditions, we recommend that you confirm solderability before you use the products.

●Usage Conditions

<Mounting>

Do not install the product with oil or metal powder.
This may cause insulation deterioration.

<Temperature>

The electrical characteristics of the products are limited by the application temperature.
If you use them at temperatures outside of the operating temperature range, the electrical characteristics of the products will not be achieved and the products may deteriorate. For that reason, you must determine the temperature characteristics in advance and apply derating* to the design of the application. (*Derating reduces stress.) Consider derating in the operating temperature conditions and apply the recommended operating temperature as a guideline.

<Humidity>

To ensure long-term reliability, consider derating the operating humidity conditions and operate within the following humidity range.
When operating in a high-humidity environment, moisture intrusion may cause deterioration or failure of the internal semiconductor elements. Also, in systems with high signal source impedance, leakage current between the board and product reeds can cause a malfunction.
When operating in a low-humidity environment, suppress the generation of static electricity as much as possible and take appropriate measures to prevent static electricity buildup around the product.
Static electricity discharge may damage the semiconductors inside the element and prevent normal operation.

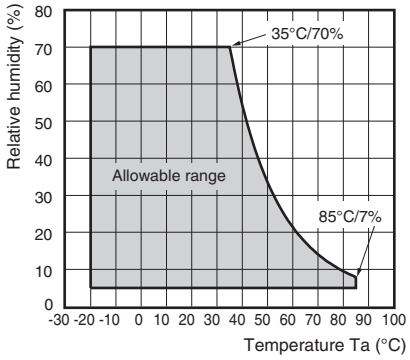

Note: No icing or condensation within the operating temperature range.

<Replace>

- Be sure to turn off the power when replacing parts.
There is a risk of electric shock.

<Disposal>

- This product uses compound semiconductors containing GaAs (gallium arsenide). Do not destroy, cut, crush or chemically decompose the product as the powder and vapor generated are harmful to the human body.

●Considerations when handling Products

<Moisture proof package, MSL5>

Surface mount products may have a crack when thermal stress is applied during surface mount assembly after they absorb atmospheric moisture. Therefore, please observe the following precautions.

(1) This moisture proof bag may be stored unopened within 12 months at the following conditions.
Temperature: 5°C to 30°C
Humidity: 90% (Max.)
(2) After opening the moisture proof bag, the devices should be assembled within 48 hours in an environment of 5°C to 30°C / 60%RH or below.
(3) If upon opening, the moisture indicator card shows humidity 30% or above (Color of indication changes to pink) or the expiration date has passed, the devices should be baked in taping with reel. After baking, use the baked devices within 48 hours, but perform baking only once.
Baking conditions: 120±5°C. For 72 hours.
Expiration date: 12 months from sealing date, which is imprinted on the label affixed.
(4) Repeated baking can cause the peeling strength of the taping to change, then leads to trouble in mounting. Furthermore, prevent the devices from being destructed against static electricity for baking of it.
(5) If the packing material of laminate would be broken the hermeticity would deteriorate.
Therefore, do not throw or drop the packed devices.
(6) Tape-cut products are packaged without humidity resistance. Use manual soldering to mount them. (MSL not supported)

Please check each region's Terms & Conditions by region website.

OMRON Corporation
Electronic and Mechanical Components Company

Regional Contact

Americas
https://www.components.omron.com/

Europe
http://components.omron.eu/

Asia-Pacific
https://ecb.omron.com.sg/

China
https://www.ecb.omron.com.cn/

Korea
https://www.omron-ecb.co.kr/

Japan
https://www.omron.co.jp/ecb/

© OMRON Corporation 2019-2021 All Rights Reserved.
In the interest of product improvement, specifications are subject to change without notice.

Cat. No. K317-E1-02
0521(1119)