SKINTOP® MS-M BRUSH

SKINTOP® MS-M BRUSH, brass cable gland with double lamella gasket, faster, low resistance 360° screen contact, simple assembling

Info

SKINTOP® MS-M BRUSH sizes 75 x 1.5 to 110 x 2 with innovative double lamella gasket for easier assembling of cables with large diameters.







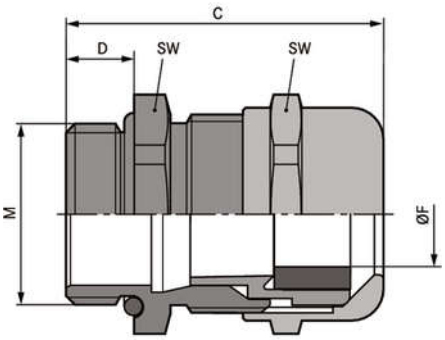

- Temperature-resistant
- Interference signals
- Voltage
- Reliability

Benefits

Faster, easier screen contact
Optimum, low-resistance 360° screen contact
Faster than any other comparable system
Uncomplicated and reliable
Maximum assembly freedom during adjustment

Application range

For EMC-compliant earthing of the copper braiding, or for cables with copper shaft sheath
Automation systems
High-power drives
Frequency converters
Conveyor and transport systems

Last Update (12.07.2017)
©2017 Lapp Group - Technical changes reserved
Product Management www.lappkabel.de
You can find the current technical data in the corresponding data sheet.
PN 0456 / 02_03.16

SKINTOP® MS-M BRUSH

Norm references / Approvals
UL File Nr. E79903

Product Make-up
Metric connection thread acc. to DIN EN 60423
Basis for technical information DIN IEC 62444

Note
SKINDICHT® SM-PE-M counter nut should be used to ensure optimum contact with painted, anodised or powder-coated housings

Technical Data

Classification:	ETIM 5.0 Class-ID: EC000441 ETIM 5.0 Class-Description: Cable screw gland
Caution:	Refer to Appendix T21 for the installation dimensions and torques
Certifications:	VDE, UL, CSA, DNV approval for size M90 x 2 and 110 x 2 pending SKINTOP® MSR-M BRUSH 25 x 1,5 approvals pending
Material:	Body: nickel-plated brass Cap nut: nickel-plated brass Insert: polyamide, halogen-free acc. to UL 94 V0 EMC brush: brass wire Sealing ring: special elastomer O-ring: special elastomer
Protection rating:	IP 68 - 10 bar (M12 - M50) IP 68 - 5 bar (M63) IP 68 - 1 bar (M63 plus - M75) IP 69 (M12 - M63)
Temperature range:	dynamic -25°C up to + 100°C Fixed: -40°C to +100°C

Note
Photographs are not to scale and do not represent detailed images of the respective products.
Prices are net prices without VAT and surcharges. Sale to business customers only.

©2017 Lapp Group - Technical changes reserved

LAPP GROUP

PRODUCT INFORMATION

SKINTOP® MS-M BRUSH

Article number	Article designation / size	Outer Ø (mm), from - to	Minimum Ø above braiding (mm)	SW mm	Thread length, D (mm)
SKINTOP® MS-M BRUSH					
53112676	M 25 x 1,5	9 - 17	6	29	8
53112677	M 32 x 1,5	11 - 21	8	36	9
53112678	M 40 x 1,5	19 - 28	10	45	9
53112679	M 50 x 1,5	27 - 35	14	54	10
53112680	M 63 x 1,5	34 - 45	20	67	15
53112681	M 63 x 1,5 plus	44 - 55	25	75	15
53112501	M 75 x 1,5	53 - 63	35	95	15
53112500	M 75 x 1,5 plus	58 - 68	35	95	15
53112503	M 90 x 2	66 - 78	45	115	20
53112505	M 110 x 2	76 - 88	55	135	25
53112504	M 110 x 2 plus	86 - 98	55	135	25

Last Update (12.07.2017)
©2017 Lapp Group - Technical changes reserved
Product Management www.lappkabel.de
You can find the current technical data in the corresponding data sheet.
PN 0456 / 02_03.16