5mm pitch 36 pole rising clamp terminal blocks

Product overview

- Unique 36 pole strips
- Professional rising clamp terminals
- Standard profile
- Moulded in grey UL94-V0 flame retardant PC
- Cable acceptance - 0.2-2mm² (30-12AWG) solid cable
- Cable acceptance - 0.2-2mm² (30-12AWG) stranded cable
- Easily cut to required number of poles or can be supplied pre-cut
- Guided pin alignment
- Anti solder wicking
- , , approved

CTB7000



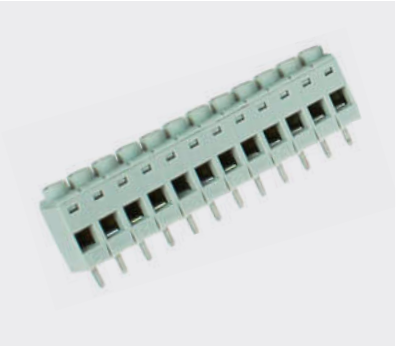

SPECIFICATION	
Rating	22A/250V UL=16A/300V, VDE and IMQ=22A/450V
Dielectric strength	≥2.5kV
Impulse withstand voltage	4kV
Working temperature	85°C
Moulding	UL94-V0 flame retardant PC
Pin/terminal	Tinned, nickel plated brass
Rising clamp	Nickel plated brass
Screw/torque	M2.5 steel zinc plated, 0.5Nm
Recommended PCB hole size	ø1.3mm

PART NO.	POLES	LENGTH
CTB7000/1	1	5mm
CTB7000/2	2	10mm
CTB7000/3	3	15mm
CTB7000/4	4	20mm
CTB7000/5	5	25mm
CTB7000/6	6	30mm
CTB7000/7	7	35mm
CTB7000/8	8	40mm
CTB7000/9	9	45mm
CTB7000/10	10	50mm
CTB7000/11	11	55mm
CTB7000/12	12	60mm
CTB7000/18	18	90mm
CTB7000/36	36	180mm

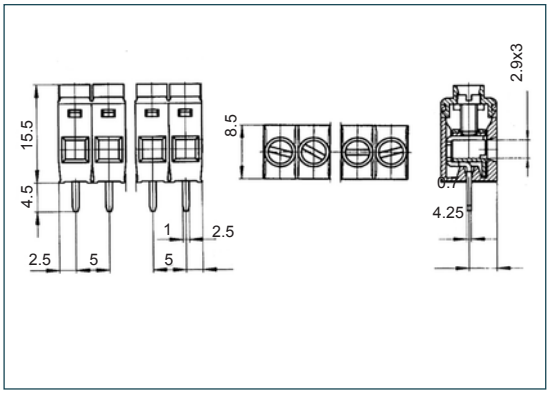

KEY FEATURES

Professional rising clamp | Easily cut to required size | Unique 36 pole design

CUSTOMISE ME PRINTING

+44 (0)1638 716101 | sales@camdenboss.com | www.camdenboss.com

We operate a constant improvement policy, our products are subject to change without notice.

Vers 1