Indicator



PSE M30 AE RI Indicator



PSE M30 AE AI Indicator



PSE M30 AE RI Indicator

Description

- The indicators are available with Lettering, Point Illumination Ring Illumination or Area Illumination
- Multicolor: flexible input voltage from 5 - 28 VDC at constant brightness
- with color combination RGB and RGY
- 7 possible colors with RGB configuration
- 3 possible colors with RGY configuration
- Can be combined with the available piezo switch variants
- Pins, Wire, Crimp Terminal male or Cable with Faston

Unique Selling Proposition

- Variety of design options regarding size, colour, material and connections
- High reliability, long lifetime
- With multicolor ring illumination

Characteristics

- For use in harsh environments, both indoors and outdoors

References

Alternative: switch normal operation: PSE NO 30

Weblinks

html-datasheet, General Product Information, CE declaration of conformity, RoHS, CHINA-RoHS, CAD-Drawings, Product News, Detailed request for product

Technical Data

Electrical Data	
ESD-protection-classs	8 kV Class 3B
Supply Voltage	Point Illumination without series resistor
Supply Voltage Multicolor	5 - 28 VDC

Mechanical Data	
Tightening Torque	2.5 Nm
Shock Protection	IK 08, IK 02
Climatical Data	
Operating Temperature	min. -40 to +85 °C
Storage Temperature	min. -40 to +85 °C
IP-Protection	IP 67 acc. to IEC 60529, IP 69K acc. to DIN 40050-9
Environmental Assessment	55°C / 93% r.h. acc. to DIN EN 60068-2-30
Salt Spray Test (acc. to DIN 50021-SS)	24 h / 48 h / 96 h Residence Time
Material	
Housing	Aluminium anodized
Gasket	NBR70
Nut	Steel galvanized

Dimension

PSE AE M30 Area Illumination

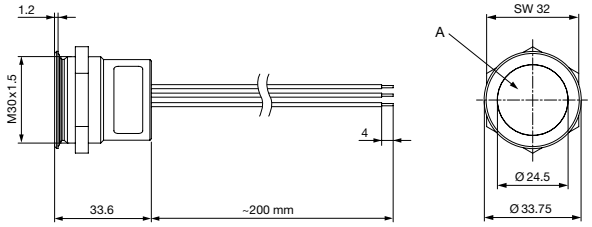

A = Illumination Area

PSE AE M30 Ring Illumination

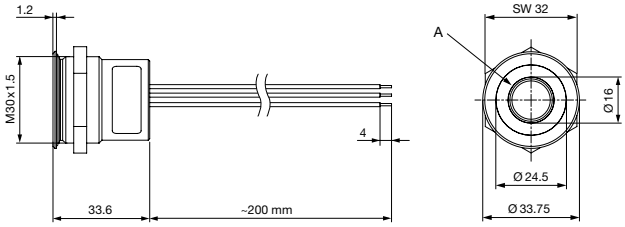

A = Illumination Area

Dimension

PSE M30

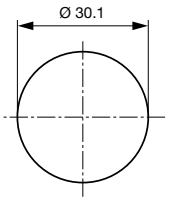

Drilling diagram

Diagrams

Ring and Area Illumination 12/24 VDC

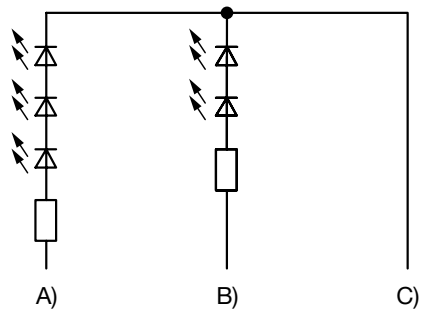

A) Cable 1 (color of the LEDs), Supply voltage first LED group
B) Cable 3 (color of the LEDs), Supply voltage second LED group
C) Cable 2 (black), Common mass of both LED groups

Ring and Area Illumination 5 VDC

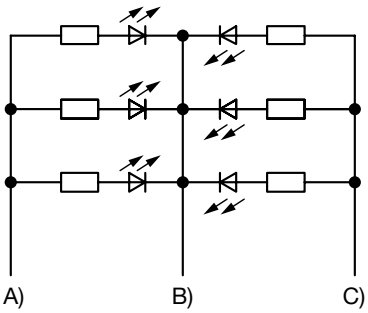

A) Cable 1 (color of the LEDs), Supply voltage first LED group
B) Cable 2 (black), Common mass of both LED groups
C) Cable 3 (color of the LEDs), Supply voltage second LED group

PSE AE PI

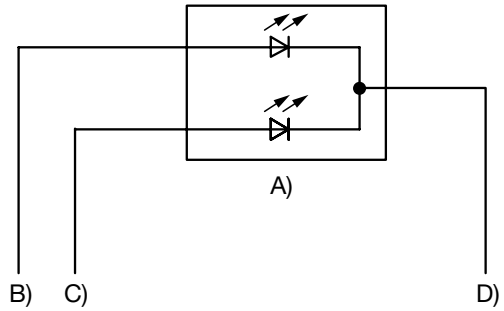

A) Double-LED (2 colors, 3 pins) or simple LED (2 pins)
B) Cable 1 (color 1 of the LED), Supply voltage
C) Cable 2 (color 2 of the LED), Supply voltage
D) Cable 3 (black), Mass

PSE AE Multicolor

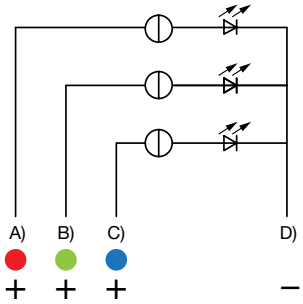

A) Cable 1 (color of the LED), Supply voltage
B) Cable 2 (color of the LED), Supply voltage
C) Cable 3 (color of the LED), Supply voltage
D) Cable 4 (black), Common mass

Lighting options Multicolor

Lighting type	Active terminal A) ●	Active terminal B) ●	Active terminal C) ●	Resulting Color
Multicolor Singlecolor	A			Red ●
Multicolor Singlecolor		B		Green ●
Multicolor Singlecolor			C	Blue ●
Multicolor RGB Additive 2	A	B		Yellow ●
Multicolor RGB Additive 2	A		C	Magenta ●
Multicolor RGB Additive 2		B	C	Cyan ●
Multicolor RGB Additive 3	A	B	C	White ○

All Variants

Mounting Diameter [mm]	Terminal	Housing Material, Torsion Protection	Colour of Housing	Surface Finish	Shock Protection	Illumination, LED	Config. Code	Order Number
30	Flexible wire connection	Aluminium anodized ,no	red	F	IK 02	Ring Illumination, red, 24	PSE M 30 AE RI	1241.3017
30	Flexible wire connection	Aluminium anodized ,no	nature	E	IK 02	Backlighted, red / green, 24	PSE M 30 AE RI	1241.3532
30	Flexible wire connection	Aluminium anodized ,no	nature	F	IK 02	Ring Illumination, red / green, 5	PSE M 30 AE RI	1241.3196
30	Flexible wire connection	Aluminium anodized ,no	nature	E	IK 02	Backlighted, red / green / blue, 5 - 28	PSE M 30 AE AI	1241.3671
30	Flexible wire connection	Aluminium anodized ,no	nature	E	IK 02	Backlighted, red / green / yellow, 5 - 28	PSE M 30 AE AI	1241.3672

Legende:
Type: PSE
AE = Indicator
RU = PI = Point Illumination
RI = Ring Illumination
AI = Area Illumination
Alu = Aluminium
ES = Stainless steel
F = Finger guidance
E = without finger guidance

Plastic nut with gasket are enclosed in the box.

Other mounting diameters, materials, colors, connections, supply voltages possible available on request.
Special materials e.g. Marine grade stainless steel for use in salt and chlorinated environment on request.

Most Popular.

Availability for all products can be searched real-time:http://www.schurter.com/Stock-Check/Stock-Check-SCHURTER

Packaging unit 10 pcs. PSE M16 AE / PSE M30 AE 20 pcs.



- Indicator elements in ESD safe packaging
- Screw nuts and sealing rings in a bag (enclosd in the box)

19.05.2016

The specifications, descriptions and illustrations indicated in this document are based on current information. All content is subject to modifications and amendments. Information furnished is believed to be accurate and reliable. However, users should independently evaluate the suitability and test each product selected for their own applications.