UIT505

Ultrasonic sensor

UIA06000E2KG/IO-Link/US

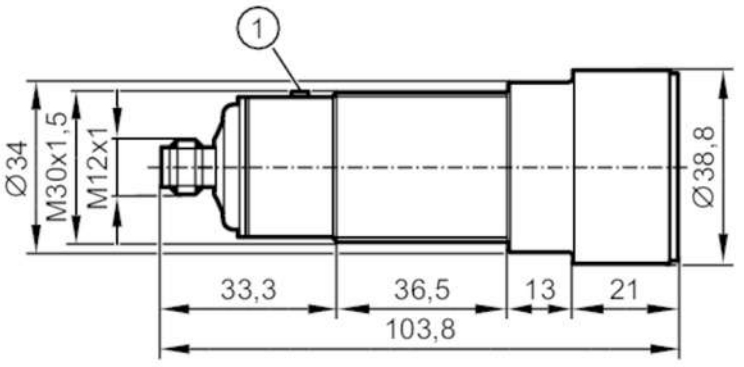

1 teach button

Product characteristics		
Electrical design		PNP
Output function		normally open / normally closed; (parameterisable)
Sensing range	[mm]	350...6000; (Target: 400 x 400 mm)
Communication interface		IO-Link
Housing		threaded type
Dimensions	[mm]	M30 x 1.5 / L = 103.8
Electrical data		
Operating voltage	[V]	10...30 DC
Current consumption	[mA]	< 30
Protection class		III
Reverse polarity protection		yes
Power-on delay time	[s]	< 0.3
Converter frequency	[kHz]	75
Inputs / outputs		
Number of inputs and outputs		Number of digital outputs: 1; Number of analogue outputs: 1
Outputs		
Total number of outputs		2
Output signal		switching signal; analogue signal; IO-Link
Electrical design		PNP
Number of digital outputs		1
Output function		normally open / normally closed; (parameterisable)
Max. voltage drop switching output DC	[V]	2.2
Permanent current rating of switching output DC	[mA]	100
Switching frequency DC	[Hz]	1
Number of analogue outputs		1
Analogue voltage output	[V]	0...10
Min. load resistance	[Ω]	3000

UIT505

Ultrasonic sensor

UIA06000E2KG/IO-Link/US

Short-circuit protection		yes
Overload protection		yes
Detection zone		
Sensing range	[mm]	350...6000; (Target: 400 x 400 mm)
Blind zone	[mm]	350
Angle of aperture cylindrical	[°]	15; (±2)
Max. deviation from the 90° angle sensor/object	[°]	± 4
Accuracy / deviations		
Temperature compensation		yes
Hysteresis	[%]	< 3
Switch point drift	[%]	-5...5
Linearity error of analogue output	[%]	<3
Repeatability		1 %
Resolution	[mm]	3
Notes on the accuracy / deviation		The indicated values are reached after a warm-up time of min. 20 minutes
Response times		
Response time	[ms]	< 600; (analogue output)
Software / programming		
Parameter setting options		hysteresis / window; second switch point; Switch-on and switch-off delay; switch-on operations; Teach function; light-on/dark-on mode
Interfaces		
Communication interface		IO-Link
Transmission type		COM2 (38,4 kBaud)
IO-Link revision		1.1
SDCI standard		IEC 61131-9
Profiles		Smart Sensor: Device Identification; Multi-channel, two setpoint switching sensor, type 0 Generic Profiled Sensor; Process Data Variable; Device Diagnosis; Teach Channel
SIO mode		yes
Required master port type		A
Min. process cycle time	[ms]	3.2
IO-Link process data (cyclical)		**function** / **bit length**
		process value / 16
		device status / 4
		binary switching information / 2
IO-Link functions (acyclical)		application specific tag; operating hours counter
Supported DeviceIDs		**Type of operation** / **DeviceID**
		default / 1098
Note		For further information please see the IODD PDF file under "Downloads"
Operating conditions		
Ambient temperature	[°C]	-20...70
Storage temperature	[°C]	-30...80
Protection		IP 67

UIT505

Ultrasonic sensor

UIA06000E2KG/IO-Link/US

Tests / approvals			
EMC		EN 61000-4-2 ESD	4 kV CD / 8 kV AD
		EN 61000-4-3 HF radiated	3 V/m
		EN 61000-4-4 Burst	2 kV
		EN 61000-4-6 HF conducted	3 V
		EN 55011	Class A
Vibration resistance		EN 60068-2-6 Fc	(10-55) Hz 1 mm amplitude, oscillation period 5 min., 30 min. per axis at resonance or 55 Hz
Shock resistance		EN 60068-2-27 Ea	30 g 11 ms half-sine; 3 shocks each in every direction of the 3 coordinate axes
MTTF	[years]	107	
UL approval		Ta	-20...70 °C
		power supply	Class 2
		File number UL	E174191
Mechanical data			
Weight	[g]	241.5	
Housing		threaded type	
Dimensions	[mm]	M30 x 1.5 / L = 103.8	
Thread designation		M30 x 1.5	
Materials		stainless steel (316L/1.4404); PA; epoxy glass ceramics	
Tightening torque	[Nm]	100	
Displays / operating elements			
Display		switching status	2 x LED, yellow
		echo	1 x LED, green
Teach function		yes	
Accessories			
Items supplied		lock nuts: 2, stainless steel	
Remarks			
Remarks		operating voltage "supply class 2" according to cULus	
Pack quantity		1 pcs.	
Electrical connection			

Connector: 1 x M12; coding: A



UIT505

Ultrasonic sensor

UIA06000E2KG/IO-Link/US

Connection

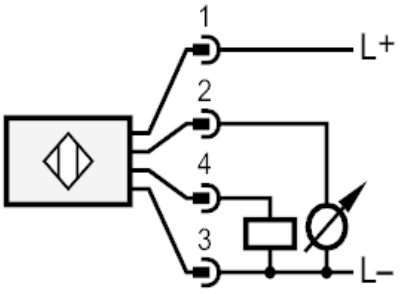

4 IO-Link

Diagrams and graphs

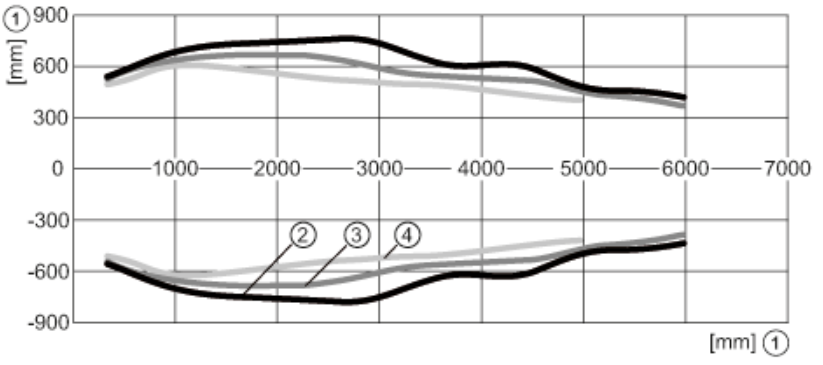

1 distance

2 Standard sound beam

3 Medium sound beam

4 Narrow sound beam