Safety dialogue solutions
Emergency stop trip wire switches, type XY2 C

Environment

Conformity to standards	Products	**XY2 CH**, **XY2 CE**: EN/IEC 60947-5-1, EN/ISO 13850:2006, UL 508 and CSA C 22-2 n° 14 (with suffix H7) **XY2 CB**: EN/IEC 60947-5-1, EN/ISO 13850:2006, CSA C 22-2 n° 14 (with suffix H2)
	Machine assemblies	**XY2 CH**, **XY2 CE**, **XY2 CB**: EN/IEC 60204-1, Machinery directive: 98/37/EC and 91/368/EEC, Work equipment directive: 89/655/EEC
Product certifications		**XY2 CH**: UL-CSA (with suffix H7), CCC *(1)* **XY2 CE**: UL-CSA A300-Q300 (with suffix H7), CCC *(1)* **XY2 CB**: CSA A600-Q600 (with suffix H2)
Protective treatment	Standard version	"TC"
	Special version	"TH"
Ambient air temperature	For operation	- 25…+ 70 °C
	For storage	- 40…+ 70 °C
Vibration resistance		**XY2 CH**: 10 gn (10…150 Hz) **XY2 CE**: 10 gn (10…300 Hz) conforming to EN/IEC 60068-2-6
Shock resistance		**XY2 CH, XY2 CE**: 50 gn (duration 11 ms) conforming to EN/IEC 60068-2-27
Electric shock protection		Class I conforming to EN/IEC 61140 and NF C 20-030
Degree of protection		**XY2 CH, XY2 CE**: IP 65 **XY2 CB**: enclosure IP 22, contact housing IP 65, conforming to EN/IEC 60529 and NF C 20-010
Mechanical life		**XY2 CH**, **XY2 CE** (Emergency stop), **XY2 CB**: 10 000 operating cycles
Length of protected zone (trip wire)		**XY2 CH**: ⩽ 15 metres, **XY2 CE**: ⩽ 50 metres, **XY2 CB**: ⩽ 100 metres and ⩽ 2 x 100 metres
Distance between cable supports		5 m
Cable entries		See dimensions, page 38145-EN/9.

Contact block characteristics

Rated operational characteristics	**XY2 CH**, **XY2 CE**: AC-15: A300 or Ue = 240 V, Ie = 3 A DC-13: Q600 or Ue = 250 V, Ie = 0.27 A conforming to EN/IEC 60947-5-1 Appendix A **XY2 CB**: AC-15: A600 or Ue = 600 V, Ie = 1.2 A DC-13: Q600 or Ue = 600 V, Ie = 0.1 A conforming to EN/IEC 60947-5-1 Appendix A
Nominal thermal current	10 A
Rated insulation voltage	**XY2 CH**, **XY2 CE**: Ui = 400 V degree of pollution 3 conforming to EN/IEC 60947-1, Ui = 300 V conforming to UL 508, CSA C22-2 n° 14 **XY2 CB**: Ui = 500 V degree of pollution 3 conforming to EN/IEC 60947-1, Ui = 600 V to CSA C22-2 n° 14
Rated impulse withstand voltage	**XY2 CH**, **XY2 CE**: Uimp = 4 kV, **XY2 CB**: Uimp = 6 kV conforming to EN/IEC 60947-1
Positive operation	N/C contact with positive opening operation conforming to EN/IEC 60947-5-1 Section 3
Contact operation	**XY2 CH**, **XY2 CE** (Emergency stop), **XY2 CB**: N/C + N/C or N/C + N/O slow break
Resistance across terminals	⩽ 25 mΩ conforming to NF C 93-050 method A or EN/IEC 60255-7 category 3
Terminal referencing	Conforming to CENELEC EN 50013
Short-circuit protection	**XY2 CH, XY2 CE**, **XY2 CB**: 10 A cartridge fuse type gG (gl) conforming to EN/IEC 60269

Rated operational power (Electrical durability)

Operating rate: 3600 operating cycles/hour
Load factor: 0.5

XY2 CH, XY2 CE
Conforming to EN/IEC 60947-5-1 Appendix C
Utilisation categories AC-15 and DC-13

a.c. supply ∿ 50…60 Hz

⎓⎓ Inductive circuit

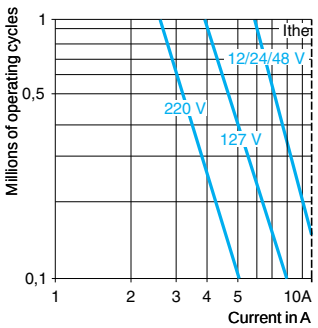

Voltage	V	**24**	**48**	**120**
⎓⎓	W	15	23	30

XY2 CB
Conforming to EN/IEC 60947-5-1 Appendix C
Utilisation categories AC-15 and DC-13

a.c. supply ∿ 50…60 Hz

Power broken in VA *(1)*

⎓⎓ Inductive circuit

Voltage	V	**24**	**48**	**127**	**220**
⎓⎓	VA	250	250	500	500

d.c. supply ⎓

Power broken in W *(1)*

⎓⎓ Inductive circuit

Voltage	V	**24**	**48**	**120**
⎓⎓	W	50	100	100

(1) For 1 million operating cycles.

Contact connection	Screw clamp terminals Clamping capacity: min. 1 x 0.5 mm², max. 2 x 1.5 mm² Minimum tightening torque: 0.8 N.m Maximum tightening torque: 1.2 N.m

(1) Only products XY2 CH without pilot light and XY2 CE without pilot light or with 24, 48 or 130 V pilot light are CCC and UL-CSA approved.

General: page 38148-EN_Ver10.0/2
References: page 38145-EN/3
Dimensions: page 38145-EN/9

Safety dialogue solutions
Emergency stop trip wire switches, type XY2 C


803015

XY2 CH13250

Latching Emergency stops
(integrated turnbuckle, cable and end spring to be ordered separately) *(1)*

Without pilot light

Length of cable	Colour of enclosure	Reset		Type of contact			Cable anchor point	Reference	Weight kg
⩽ **15 m**	Grey RAL 7032	By booted pushbutton	–	1	1	N/C + N/O slow break	RH side or LH side	**XY2 CH13250** *(3)*	0.865
		By mushroom head pushbutton	–	1	1			**XY2 CH13350** *(3)*	0.900
		By key operated pushbutton (key n° 421) *(2)*	–	1	1			**XY2 CH13450** *(3)*	0.910
		By flush pushbutton	–	2	–	N/C + N/C slow break	RH side or LH side	**XY2 CH13170** *(3)*	0.865
		By booted pushbutton	–	2	–			**XY2 CH13270** *(3)*	0.865
		By mushroom head pushbutton	–	2	–			**XY2 CH13370** *(3)*	0.865
		By key operated pushbutton (key n° 421) *(2)*	–	2	–			**XY2 CH13470** *(3)*	0.910
	Grey RAL 3000 *(4)*	By booted pushbutton	–	1	1	N/C + N/O slow break	RH side or LH side	**XY2 CH13258** *(3)*	0.865
				2	–	N/C + N/C slow break	RH side or LH side	**XY2 CH13278** *(3)*	0.865
With pilot light (direct supply)									
⩽ **15 m**	Grey RAL 7032	By booted pushbutton	24 V	1	1	N/C + N/O slow break	RH side or LH side	**XY2 CH13253**	0.900
				2	–	N/C + N/C slow break	RH side or LH side	**XY2 CH13273**	0.900


807506

XY2 CE1A250

Latching Emergency stops
(turnbuckle, cable and end spring to be ordered separately) *(1)*

Without pilot light

⩽ **50 m** *(5)*	Grey RAL 7032	By booted pushbutton	–	1	1	N/C + N/O slow break	RH side	**XY2 CE1A250** *(6)*	1.450
							LH side	**XY2 CE2A250** *(6)*	1.450
				2	–	N/C + N/C slow break	RH side	**XY2 CE1A270** *(6)*	1.450
							LH side	**XY2 CE2A270** *(6)*	1.450
		By key operated pushbutton (key n° 421) *(2)*	–	1	1	N/C + N/O slow break	RH side	**XY2 CE1A450** *(6)*	1.465
							LH side	**XY2 CE2A450** *(6)*	1.465
				2	–	N/C + N/C slow break	RH side	**XY2 CE1A470** *(6)*	1.470
							LH side	**XY2 CE2A470** *(6)*	1.470
With pilot light (direct supply)									
⩽ **50 m** *(5)*	Grey RAL 7032	By booted pushbutton	24 V, 48 V, 130 V (bulb not included)	2	2	N/C + N/O slow break	RH side	**XY2 CE1A296**	1.470
							LH side	**XY2 CE2A296**	1.470
			230 V (bulb not included)	2	2	N/C + N/O slow break	RH side	**XY2 CE1A297**	1.470
							LH side	**XY2 CE2A297**	1.470

Other versions

See order forms on pages 38145-EN/4 and 38145-EN/5.
XY2 CE with reset by Ø 40 mm mushroom head pushbutton or with integral cable tensioner and support.
Please consult your Regional Sales Office.

(1) See separate components, page 38145-EN/7.
(2) Ø 30 spring return, mushroom head, key operated pushbutton. Locking and key withdrawal in the rest (unactuated) position.
*(3) For ISO M20 threaded cable entry version, add H29 to the end of the reference selected. Example: **XY2 CH13250** becomes **XY2 CH13250H29**.*
(4) Only available on Emergency stop enclosures type XY2 CH1325● and XY2 CH1327● for standard, H29 and TK versions.
(5) Available with window for viewing cable tension indicator, for adjustment whilst the cover is closed (see versions XY2 CE●D●●● and XY2 CE●E●●● on the order form, page 38145-EN/6.
*(6) ATEX version available (products for explosive atmospheres). To order, add **EX** to the end of the reference. Example: **XY2 CE1A250** becomes **XY2 CE1A250EX**.*

General: page 38148-EN_Ver10.0/2
Characteristics: page 38145-EN/2
Dimensions: page 38145-EN/9

Safety dialogue solutions
Emergency stop trip wire switches, type XY2 C



XY2 CB30

Latching Emergency stops
(end spring included, turnbuckle and cable to be ordered separately) *(1)*

Without pilot light

Length of cable	Colour of enclosure	Reset	Type of contact			Cable anchor point	Reference	Weight kg
⩽ 100 m	Blue	From inside enclosure	1	1	N/C + N/O slow break	LH side	**XY2 CB10**	18.750
						RH side	**XY2 CB20**	18.750
			2	–	N/C + N/C slow break	LH side	**XY2 CB104**	18.750
						RH side	**XY2 CB204**	18.750
⩽ 2 x 100 m	Blue	From inside enclosure	1	1	N/C + N/O slow break	RH and LH sides	**XY2 CB30**	29.250
			2	–	N/C + N/C slow break	RH and LH sides	**XY2 CB304**	29.250

With pilot light

Length of cable	Colour of enclosure	Reset	Supply voltage	Type of contact			Cable anchor point	Reference	Weight kg
■ Direct supply									
⩽ 100 m	Blue	From inside enclosure	24 V	1	1	N/C + N/O slow break	LH side	**XY2 CB11**	19.550
							RH side	**XY2 CB21**	19.550
			48 V	1	1	N/C + N/O slow break	LH side	**XY2 CB12**	19.550
							RH side	**XY2 CB22**	19.550
⩽ 2 x 100 m	Blue	From inside enclosure	24 V	1	1	N/C + N/O slow break	RH and LH sides	**XY2 CB31**	25.600
			48 V	1	1	N/C + N/O slow break	RH and LH sides	**XY2 CB32**	30.050
■ Supply via integral transformer *(2)*									
⩽ 100 m	Blue	From inside enclosure	127 V/6 V	1	1	N/C + N/O slow break	LH side	**XY2 CB13**	15.600
							RH side	**XY2 CB23**	15.600
			220 V/6 V	1	1	N/C + N/O slow break	LH side	**XY2 CB14**	15.600
							RH side	**XY2 CB24**	15.600
⩽ 2 x 100 m	Blue	From inside enclosure	127 V/6 V	1	1	N/C + N/O slow break	RH and LH sides	**XY2 CB33**	25.600
			220 V/6 V	1	1	N/C + N/O slow break	RH and LH sides	**XY2 CB34**	25.600

(1) See separate components, page 38145-EN/7. End spring XY2 CZ702 included.
(2) Bulb DL1 CB006 included.

General: page 38148-EN_Ver10.0/2
Characteristics: page 38145-EN/2
Dimensions: page 38145-EN/9

Safety dialogue solutions
Emergency stop trip wire switches, type XY2 C

Complete units, pre-assembled

Customer			Schneider Electric Industries SA	
Company	Order N°	Delivery date	Sales office - Subsidiary Co.	Order N°

How to use this form:
- indicate the number of Emergency stop switches required,
- complete the basic reference.

Reference

Number of identical Emergency stops ☐ **XY2 CH** ☐☐☐☐☐☐☐

Model							
Emergency stop (latching)		**1**					
Degree of protection							
IP 65 (standard bellows) without tensioner			**1**				
IP 65 (silicone bellows) without tensioner			**2**				
IP 65 (standard bellows) with integral tensioner			**3**				
IP 65 (silicone bellows) with integral tensioner			**4**				
Type of reset							
Emergency stop *(1)* Reset by spring return pushbutton	Flush			**1**			
	Booted			**2**			
	Mushroom head, Ø 30			**3**			
	Key operated mushroom head, Ø 30 (key n° 421)			**4**			
	Key operated mushroom head, Ø 30 (key n° 455)			**5**			
	Key operated mushroom head, Ø 30 *(2)*			**9**			
Contact block for Emergency stop function *(3)*							
Slow break	1 N/C + N/O (N/O staggered)				**5**		
	1 N/C + N/C				**7**		
Pilot light							
Without pilot light						**0**	
With 24 V direct supply pilot light						**3**	
With 48 V direct supply pilot light						**4**	
With 130 V direct supply pilot light						**5**	
With 230 V direct supply pilot light						**7**	
1/2" NPT tapped cable entries							**H7** *(4)*
ISO M20 tapped cable entries							**H29**
Increased protective treatment against corrosion							**TK** *(5)*

(1) Opening of a circuit + mechanical latching in the open position.
(2) Other key numbers:

458A	520E	1242A	1243E	1344A	1422A	1431E
2123E	2132E					

(3) Emergency stop trip wire switches can only be fitted with slow break contact blocks.
(4) Only for versions without pilot light. For versions with pilot light, order an H4 version.
*(5) Protective treatment TK is only possible for switches with silicone bellows (**XY2 CH12●●●TK**, **XY2 CH14●●●H29TK**...).*

Safety dialogue solutions
Emergency stop trip wire switches, type XY2 C

Complete units, pre-assembled

Customer			**Schneider Electric Industries SA**	
Company	Order N°	Delivery date	Sales office - Subsidiary Co.	Order N°

How to use this form:
- indicate the number of Emergency stop switches required,
- complete the basic reference.

Reference

Number of identical Emergency stops ☐ **XY2 CE** ☐ ☐ ☐ ☐ ☐ ☐ ☐

Model								
Emergency stop (latching)	Anchor point on RH side, standard force	**1**						
	Anchor point on LH side, standard force	**2**						
	Anchor point on RH side, light force	**5**						
	Anchor point on LH side, light force	**6**						
Degree of protection and “cable tension indicator” window								
IP 65 (standard bellows) without “cable tension indicator” window			**A**					
IP 65 (silicone bellows) without “cable tension indicator” window			**C**					
IP 65 (standard bellows) with “cable tension indicator” window			**D**					
IP 65 (silicone bellows) with “cable tension indicator” window			**E**					
Type of reset								
Emergency stop *(1)* Reset by spring return pushbutton	Flush			**1**				
	Booted			**2**				
	Mushroom head, Ø 30			**3**				
	Key operated mushroom head, Ø 30 (n° 421)			**4**				
	Key operated mushroom head, Ø 30 (n° 455)			**5**				
	Key operated mushroom head, Ø 30 *(2)*			**9**				
Contact block for Emergency stop function *(3)*								
Slow break	1 N/C + N/O				**5**			
	1 N/C + N/C				**7**			
	2 N/C + N/O (compulsory with pilot light) *(4)*				**9**			
Pilot light								
Without pilot light						**0**		
With 24-48-130 V direct supply pilot light. Bulb not included (provide for 2 contact blocks)						**6**		
With 230 V direct supply, via integral resistor, pilot light. Bulb included (provide for 2 contact blocks) *(5)*						**7**		
1/2" NPT tapped cable entries							**H7** *(6)*	
Increased protective treatment against corrosion								**TK** *(7)*

(1) Opening of N/C contact + mechanical latching in the open position.
(2) Other key numbers:

458A	520E	1242A	1243E	1344A	1422A	1431E
2123E	2132E					

(3) Emergency stop trip wire switches can only be fitted with slow break contact blocks.
(4) The use of a pilot light means selecting a switch fitted with 2 N/C + N/O contacts: XY2 CE●●●9.
(5) Replacement bulb: DL1 CE130.
(6) For versions with pilot light, order an H4 version.
*(7) Protective treatment TK is only possible for switches with silicone bellows (**XY2 CE●C●●●TK, XY2 CE●E●●●H7TK**...).*

Safety dialogue solutions
Emergency stop trip wire switches, type XY2 C

803025
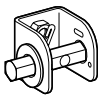
XY2 CZ203

803017
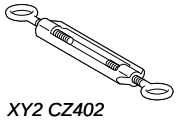
XY2 CZ402

810060

XY2 CZ503

803019

XY2 CZ524

810061

XY2 CZ601

803018

XY2 CZ602

803020
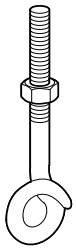
XY2 CZ705

803016

XY2 CZ708

810062

XY2 CZ701

803021
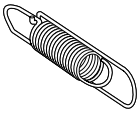
XY2 CZ702

803022
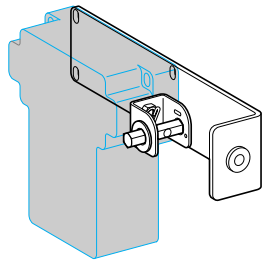
XY2 CZ917

Separate components

Description	For use with	Diameter mm	Length m	Reference	Weight kg
Galvanised cables with red sheath	XY2 CH, XY2 CE and XY2 CB	3.2	10.5	**XY2 CZ301**	0.280
			15.5	**XY2 CZ3015**	0.410
			25.5	**XY2 CZ302**	0.690
			50.5	**XY2 CZ305**	1.360
			100.5	**XY2 CZ310**	2.700
	XY2 CH and XY2 CE	5	15.5	**XY2 CZ1015**	0.850
			25.5	**XY2 CZ102**	1.400
			50.5	**XY2 CZ105**	2.750
			100.5	**XY2 CZ110**	5.500

Description	Type	For use with	Sold in lots of	Unit reference	Weight kg
Tensioner	–	XY2 CE only	1	**XY2 CZ203**	0.09
Turnbuckles	M6 x 60 + locknut	All models *(1)*	1	**XY2 CZ402**	0.060
	M8 x 70 + locknut	All models *(1)*	1	**XY2 CZ404**	0.100
Cable grips	Single	Cable Ø 3 to 5 mm	10	**XY2 CZ503**	0.007
	Double	Cable Ø 3 to 5 mm	10	**XY2 CZ513**	0.016
	Clamp	Cable Ø 3.2 mm	10	**XY2 CZ523**	0.050
		Cable Ø 5 mm	10	**XY2 CZ524**	0.080
Cable supports	Fixed	All models	10	**XY2 CZ601**	0.030
	Swivelling	All models	1	**XY2 CZ602**	0.130
	Pulley support	XY2 CH and XY2 CE	1	**XY2 CZ705**	0.060
Pulley	Cable Ø 5 mm max.	XY2 CH and XY2 CE	1	**XY2 CZ708**	0.002
Cable end protectors		Cable Ø 3.2 mm	10	**XY2 CZ701**	0.002
		Cable Ø 5 mm	10	**XY2 CZ704**	0.010
End springs		XY2 CH	1	**XY2 CZ703**	0.035
		XY2 CE and XY2 CB	1	**XY2 CZ702**	0.080

Mounting kits

Contents	For use with	Cable diameter	Length of cable	Reference	Weight
		mm	m		kg
1 tensioner **XY2 CZ203** + 1 bracket	XY2 CE	–	–	**XY2 CZ917**	0.612
1 galvanised cable + 1 cable grip **XY2 CZ523** + 1 end spring **XY2 CZ703**	XY2 CH	3.2	10	**XY2 CZ9310**	0.415
			15	**XY2 CZ9315**	0.535
1 galvanised cable + 4 cable grips **XY2 CZ523** + 1 turnbuckle **XY2 CZ404** + 1 cable support **XY2 CZ601** + 3 cable end protectors **XY2 CZ701** + 1 end spring **XY2 CZ702**	XY2 CE	3.2	25	**XY2 CZ9325**	10
	XY2 CE and XY2 CB	3.2	50	**XY2 CZ9350**	1.980
1 galvanised cable + 4 cable grips **XY2 CZ524** + 1 turnbuckle **XY2 CZ404** + 1 cable support **XY2 CZ601** + 3 cable end protectors **XY2 CZ704** + 1 end spring **XY2 CZ702**	XY2 CE	5	25	**XY2 CZ9525**	1.905
			50	**XY2 CZ9550**	3.280

Documentation

Description	For use with	Reference	Weight kg
Installation manual	XY2 CH and XY2 CE	**XCOM2512**	0.200

(1) Emergency stop trip wire switches XY2 CH13●●● and XY2 CH14●●● incorporate a cable tensioner as standard. Therefore, there is no need to order a turnbuckle.

General: page 38148-EN_Ver10.0/2
Characteristics: page 38145-EN/2
Dimensions: page 38145-EN/9

Safety dialogue solutions
Emergency stop trip wire switches, type XY2 C

Replacement parts

Description	Type		Reference	Weight kg
Reset pushbutton (blue), spring return for XY2 CH and XY2 CE	Flush with "R" marked on push		**ZA2 BA639**	0.030
	Booted		**ZA2 BP6**	0.025
	Mushroom head, Ø 30		**ZA2 BC64**	0.045
	Key operated mushroom head, Ø 30 (key n° 421)		**ZA2 BS06212**	0.090
	Key operated mushroom head, Ø 30 (key n° 455)		**ZA2 BS062**	0.090
Keys for reset button	N° 421		**Q99900911**	0.006
	N° 455		**Q99900901**	0.006
Pilot light head assembly	Orange, for XY2 CH and XY2 CE		**ZA2 BV05**	0.015
Pilot light lens	Orange, for XY2 CH and XY2 CE		**ZB2 BV015**	0.003
Fixing nut	Black plastic nut for head ZA2 B		**ZA2 BZ901**	0.002
Fixing nut tightening tool	Black plastic socket wrench for fixing nut ZA2 BZ901		**ZA2 BZ901**	0.060
Pilot lights With bulb DL1 AA●●● included	Orange, for XY2 CH	24 V	**XY2 CZ0024** *(1)*	0.035
		48 V	**XY2 CZ0048** *(1)*	0.035
		130 V	**XY2 CZ0130** *(1)*	0.035
		230 V	**XY2 CZ0230** *(1)*	0.035
	Red, for XY2 CB	24 V	**9001 KP35R9**	0.134
		48 V	**9001 KP36R9**	0.134
		120 V	**9001 KP1R9**	0.210
		230 V	**9001 KP7R9**	0.210

803023

XY2 CZ●●●●

111270

9001 KP3●R9

Description	Type		Sold in lots of	Unit reference	Weight kg
Incandescent bulbs	Screw base fitting for XY2 CH	24 V - 6 W	10	**DL1 AA024**	0.004
		48 V - 6 W	10	**DL1 AA048**	0.004
		130 V - 6 W	10	**DL1 AA127**	0.004
		230 V - 6 W	10	**DL1 AA220**	0.004
	BA 9s base fitting for XY2 CE and XY2 CB	24 V - 2.6 W	10	**DL1 CE024**	0.002
		48 V - 2.6 W	10	**DL1 CE048**	0.002
	BA 9s base fitting for XY2 CE	130 V - 2.6 W	10	**DL1 CE130**	0.002
	BA 9s base fitting for XY2 CB 120 V and 230 V	6 V - 1.2 W	10	**DL1 CB006**	0.002
Packet of 5 collars	For mounting DL1 AA127 and DL1 AA220 bulbs in pilot lights XY2 CZ●●●		5	**XY2 CZ908**	0.018
Dust and damp protecting bellows	For XY2 CE	Polychloroprene	1	**XY2 CZ901**	0.017
		Silicone	1	**XY2 CZ904**	0.005
	For XY2 CH	Polychloroprene	1	**XY2 CZ902**	0.017
		Silicone	1	**XY2 CZ903**	0.005
Adaptor	For XY2 CB	ISO M20	5	**DE9 RP13520**	0.050

807505

XY2 CZ901

803024

XY2 CZ902

(1) Only for use as replacement parts for switches pre-fitted with pilot lights. CCC and UL-CSA approvals no longer apply if a pilot light XY2 CZ●●● is mounted on Emergency stops XY2 CH.

General: page 38148-EN_Ver10.0/2
Characteristics: page 38145-EN/2
Dimensions: page 38145-EN/9

Safety dialogue solutions
Emergency stop trip wire switches, type XY2 C

XY2 CH

Without pilot light

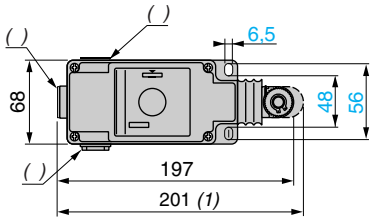

With pilot light

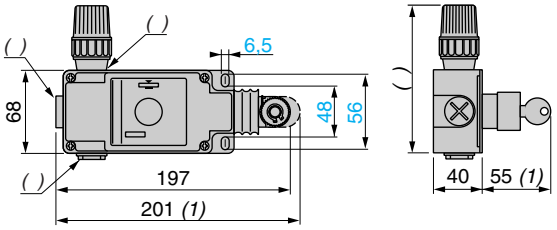

(1) Maximum extension.
*(2) Tapped entries for n° 13 (Pg 13.5) cable gland. For ISO M20 the reference becomes **XY2 CH●●●●●H29**.*
(3) 121 mm: 24 V and 48 V versions. 131 mm: 130 V and 230 V versions.

XY2 CE

XY2 CE●A●●●, XY2 CE●C●●●

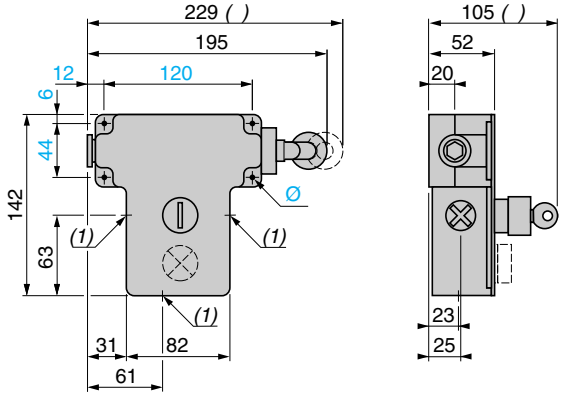

XY2 CE●A●●● + XY2 CZ917 (tensioner + bracket)

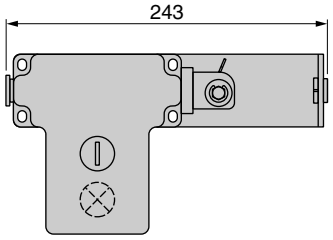

(1) 3 plain holes for n° 13 (Pg 13.5) or ISO M20 cable gland.
(2) Maximum extension.
Ø: 4 elongated holes Ø 6 mm.

XY2 CB

Without pilot light

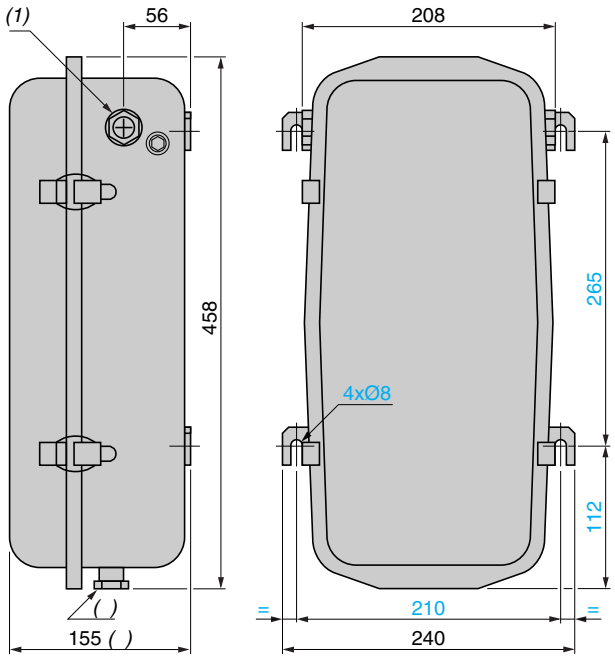

With pilot light

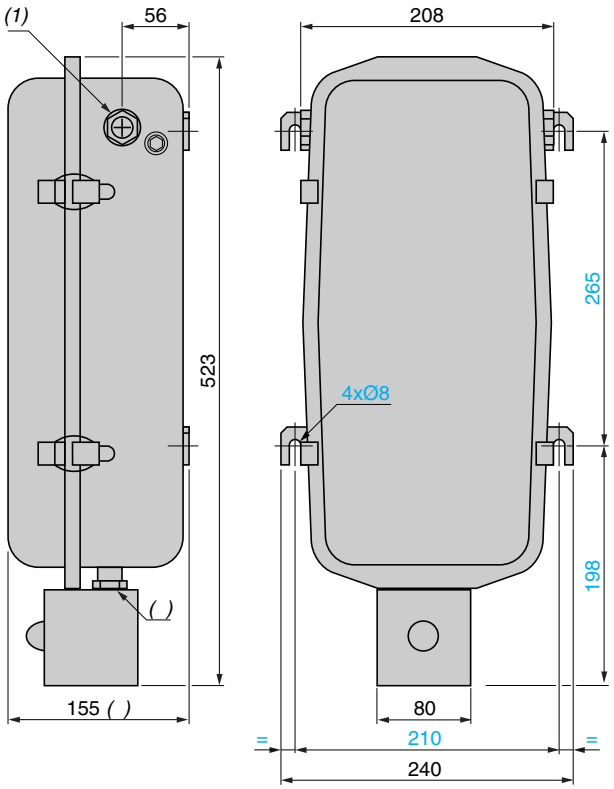

(1) 2 access points for operating cable.
(2) + 125 for opening cover.
(3) 1 tapped entry for n° 13 (Pg 13.5) cable gland. For ISO M20 use adaptor DE9 RP13520.

Accessories

XY2 CZ705

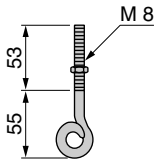

XY2 CZ708

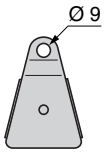

General: page 38148-EN_Ver10.0/3
Characteristics: page 38145-EN/2
References: page 38145-EN/3