

ISOM Digiware D-55 / D-75

Control and power supply interfaces



isom-dw_018_a_front.eps

ISOM Digiware D-75

Configuration with Easy Config System.

Function

The power monitoring interfaces **ISOM Digiware D-55** and **D-75** allow the following:

- A local visualisation of data from ISOM Digiware L-60 and F-60 modules, but also from the other modules connected to the Digiware network or from COUNTIS E and DIRIS A over the RS485 bus
- Power supply of Digiware modules
- Access to this data over Ethernet

Via an RS485 connection, the ISOM Digiware screen also acts as a gateway, centralising all measurements from the measuring devices and making this information available on Ethernet.

Version specially designed for healthcare establishments.

Advantages

High-resolution graphic screen

The screen displays various graphical objects such as bar graphs and insulation curves with measurement cursors.

Secure power supply

The 24 VDC power supply prevents hazardous voltages on the cabinet doors.

Ergonomic and easy to use

With its 10 buttons on the front panel, you can quickly access the measurement information.

The Quick-Access button lets you quickly and easily navigate between the main operating screens.

It also makes it much easier to select and configure equipment and circuits.

Centralising measurement points:

- Selecting the circuit
- Viewing the data

Email notifications

In the event of an alarm, the device can automatically send an email to prevent use (e.g. if there is an insulation fault).

Embedded web server (D-75)

Accessed simply using the Web browser from a PC, this integrated function on the ISOM Digiware D-75 allows you to show the information from all connected devices (WEBVIEW-M function).

Expert Services

EXPERT SERVICES

Socomec offers a range of services to help you optimise your electrical installations and increase efficiency:

- Startup
- Checking the insulation monitoring architecture (NFC 15100)
- Fault-finding
- Training on the handheld fault location tool, ISOM PS-62

To find out more, ask your Socomec representative.

The solution for

- Industries
- Energy production
- Naval, military and railway infrastructures



Strong points

- High-resolution graphic screen
- Secure power supply
- Ergonomic and easy to use
- Centralisation of measurement points
- Email notifications
- Embedded web server (D-75)

Conformity to standards

- IEC 61557-8
- IEC 61557-9
- IEC 61557-12
- ISO 14025

Approvals and certifications

- Naval certifications (1)

(1) Certification in progress.

Create your project

- Find the best Digiware configuration: **www.meter-selector.com**

METER SELECTOR DIGITAL TOOL AVAILABLE

Front panel



isom-dw_018x_a_2_cat.ai

1. RESET: Reset alarms
2. TEST: Start test sequence on L-60 and F-60
3. Quick-Access button: Overall insulation ➜ Rf and Cf curves ➜ Specific circuit insulation ➜ PMD measurements (if available)
4. Navigation buttons
5. OK button
6. Device selection
7. Home (long press)
   Back (short press)
8. LED indicators:
   ALARM: insulation fault
   FAULT: system alarm
   COM: com bus active
   ON: power on

Dimensions (mm)

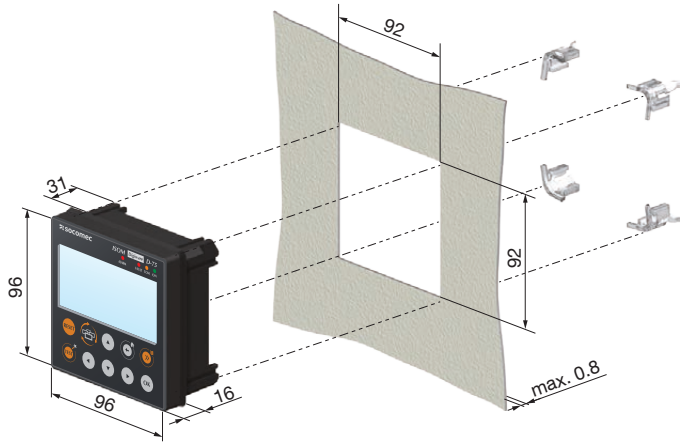

isom-dw_047_b_1_x.ai

Connections

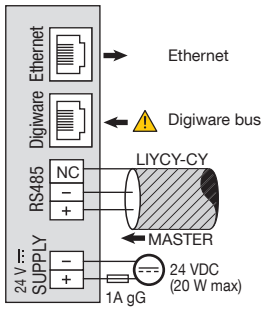

isom_dw_024_a_gb_cat.ai

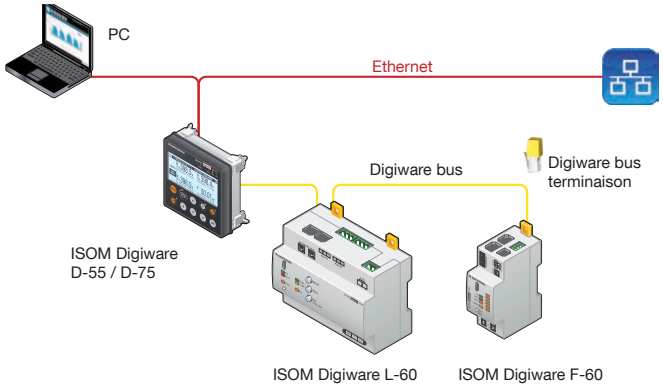

isom-dw_025_a_1_gb_cat.ai

Configuration

Equipment power consumption

Product	Power supplied (W)	Power consumed (W)
Power supply		
P15 230 V / 24 VDC 15 W	15	
P30 230 V / 24 VDC 30 W	30 (1)	
Cables		
50-metre bundle		1.5
System interfaces		
ISOM Digiware D-55 / D-55h		2.5
ISOM Digiware D-75		2.5
IMD / voltage module		
ISOM Digiware L-60 / L-60h		2.3
DIRIS Digiware U-xx		0.75
FLD modules		
ISOM Digiware F-60		0.5
ISOM T-15 + ΔIP		0.05
Single-point alert report		
ISOM D-15h		0.5
Repeater		
DIRIS Digiware C-32		1.5

(1) Max 20 W for use by the Digiware system.

Calculation rules for the max. number of devices on the Digiware bus

The total power consumed by the equipment connected to the Digiware bus must not exceed the power from the 24 VDC. The power supply must not exceed 20 W.

Sizing with power supply P15 (reference 4829 0120) delivering 15 W

For example, it is possible to use
- 1 ISOM Digiware D-75 (2.5 W) display
- 1 ISOM Digiware L-60 IMD module (2.3 W)
- 25 metres of cable (0.75 W)

and
- 11 FLD ISOM Digiware F-60 (11 x 0.5 = 5.5 W) modules
- 66 adapters ISOM T-15 (66 x 0.05 = 3.3 W)

-> Total power = 14.35 W

Sizing with a supply P30 power supply (reference 4729 0603) can deliver max. 20 W to the Digiware system

For example, it is possible to use
- 1 ISOM Digiware D-75 (2.5 W) display
- 1 ISOM Digiware L-60 IMD module (2.3 W)
- 1 DIRIS Digiware U-xx (0.72 W) voltage module
- 25 metres of cable (0.75 W)

and
- 17 FLD ISOM Digiware F-60 (17 x 0.5 = 8.5 W) modules
- 102 adapters ISOM T-15 (102 x 0.05 = 5.1 W)

-> Total power = 19.87 W

Repeater

Whenever the power consumption is higher than 20 W or the distance is greater than 100 m, a DIRIS Digiware C-32 repeater is required.
In an ISOM Digiware system, a maximum of 2 repeaters may be used.

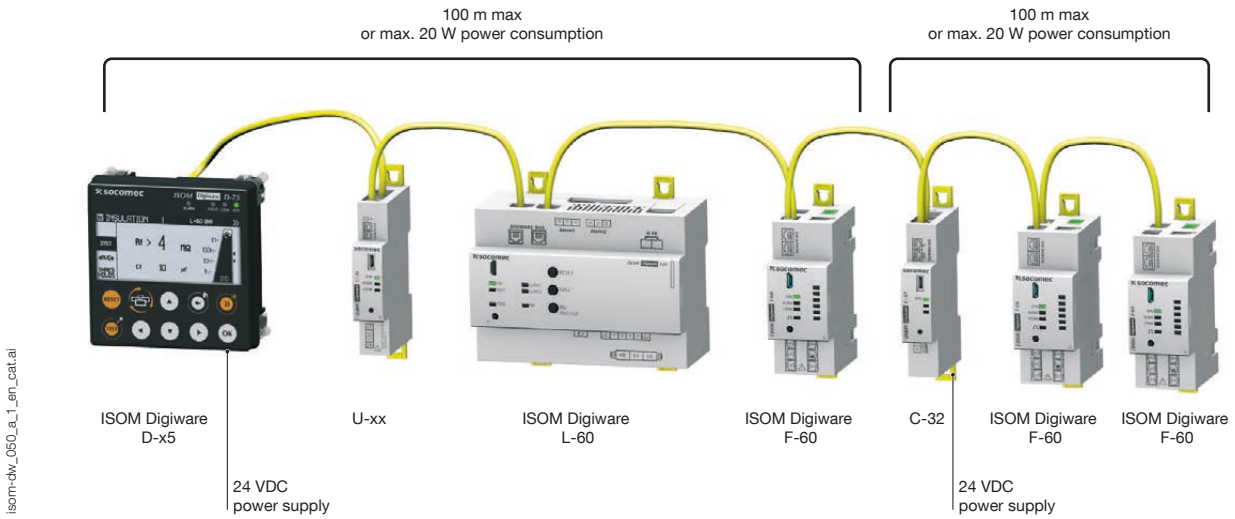

Technical specifications

Digiware bus	
Function	Connects ISOM Digiware modules
Cable type	Specific Socomec cable with RJ45 connection
RS485	
Connection type	2 to 3 half duplex wires
Protocol	Modbus RTU
Baudrate	1,200 to 115,200 bauds
Mechanical specifications	
Type of screen	Capacitive touch-screen technology, 10 keys
Screen resolution	350 x 160 pixels
Front panel protection degree	IP 65
Electrical specifications	
Power supply	24 VDC +10% / -20%
Power consumption	2.5 VA

Communication	
Ethernet RJ45 10/100 Mbs	Gateway function: Modbus TCP
RJ45 Digiware	Control and power supply interface function
RS485 2-3 wires	Communication function with Modbus RTU slaves
USB	Upgrade and configuration via type B micro USB connector
Ports	
Inputs	Digiware; RS485
Outputs	Ethernet RJ45
Operating conditions	
Storage temperature	-40 to 70 °C
Operating temperature	-10 to +55 °C
Relative humidity	90% at 55 °C
Installation category - degree of pollution	CAT III, 2
Operating conditions (version t)	
Storage temperature	-40 to 85 °C
Operating temperature	-10 to 70 °C
Relative humidity	97% at 55 °C

References

Standard displays		**Reference**
D-55	Multipoint display, Ethernet output	4729 **0203**
D-75	Multipoint display, Ethernet output with web server	4729 **0205**
Heavy-duty display model		**Reference**
D-75t	Multipoint display, Ethernet output with web server	4729 **0206**
Power supply		**Reference**
P15	Power supply 100-240 VAC / 24 VDC 15 W	4829 **0120**
P30	Power supply 100-240 VAC / 24 VDC 30 W	4729 **0603**

Accessories	**Available for order in multiples of**	**Reference**
Flush mounting kit DIN 144 x 96 mm		4729 **0290**
IP65 flexible enclosure for 144 x 96 mm DIN frame		4729 **0291**
DIN rail mounting kit for ISOM Digiware D-5x monitors		4829 **0230**
Fuse holder, 1 pole + neutral to protect input voltages (RM)	4	5701 **0017**
gG 10x38 1 A fuses	10	6012 **0001**
DIN rail mounting kit for D-55 and D-75 monitors	1	4829 **0230**
Digiware connection cables		**Reference**
RJ45 cables for Digiware Bus	Length 0.06 m	4829 **0189**
	Length 0.10 m	4829 **0181**
	Length 0.20 m	4829 **0188**
	Length 0.50 m	4829 **0182**
	Length 1 m	4829 **0183**
	Length 2 m	4829 **0184**
	Length 3 m	4829 **0190**
	Length 5 m	4829 **0186**
	Length 10 m	4829 **0187**
	50 m reel + 100 connectors	4829 **0185**
Termination for Digiware Bus (supplied with interfaces C and D)		4829 **0180**
USB configuration cable		4829 **0050**