NG5001

Inductive NAMUR sensor

IG-2005-N/1D/1G

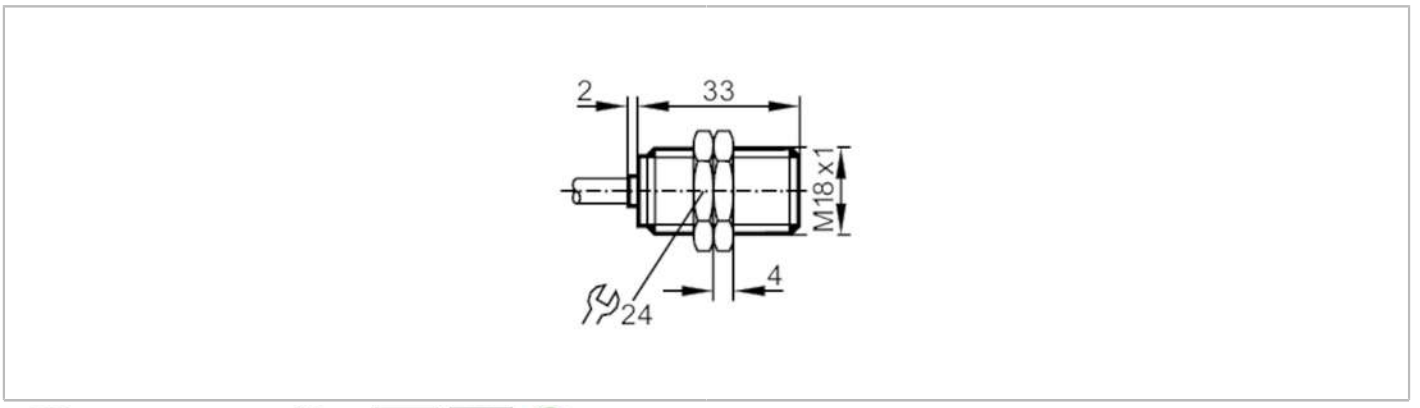

Product characteristics		
Electrical design		NAMUR
Output function		normally closed
Sensing range	[mm]	5
Housing		threaded type
Dimensions	[mm]	M18 x 1 / L = 33
Electrical data		
Connection to switching amplifiers		yes
Switching amplifiers		connection to certified intrinsically safe circuits with the max. values: U = 15 V / I = 50 mA / P = 120 mW
Nominal voltage DC	[V]	8.2; (1kΩ)
Supply voltage DC	[V]	7.5...30; (when used outside the hazardous area)
Current consumption	[mA]	< 1; (disabled; conductive: > 2,1)
Protection class		II
Outputs		
Electrical design		NAMUR
Output function		normally closed
Permanent current rating of switching output DC	[mA]	30; (when used outside the hazardous area)
Switching frequency DC	[Hz]	720
Detection zone		
Sensing range	[mm]	5
Real sensing range Sr	[mm]	5 ± 10 %
Accuracy / deviations		
Correction factor		steel: 1 / stainless steel: 0.7 / brass: 0.5 / aluminium: 0.4 / copper: 0.3
Hysteresis	[% of Sr]	1...15
Switch point drift	[% of Sr]	-10...10
Operating conditions		
Ambient temperature	[°C]	-20...80
Protection		IP 67

NG5001

Inductive NAMUR sensor

IG-2005-N/1D/1G

Tests / approvals		
Approval		PTB 01 ATEX 2191; BVS 04 ATEX E153; TIIS TC16108; IECEx BVS 06.0003
ATEX marking		II 1G Ex ia IIB T6 Ga
		II 2G Ex ia IIC T6 Gb
		II 1D Ex ia IIIC T 90°C Da
EMC		EN 60947-5-6
Shock/vibration resistance		30 g (11 ms) / 10-55 Hz (1 mm)
MTTF	[years]	4697
Safety classification		
Max. internal capacitance	[nF]	145
Max. internal inductance	[µH]	45
Mechanical data		
Weight	[g]	147
Housing		threaded type
Mounting		flush mountable
Dimensions	[mm]	M18 x 1 / L = 33
Thread designation		M18 x 1
Materials		PBT
Accessories		
Items supplied		lock nuts: 2
Remarks		
Pack quantity		1 pcs.
Electrical connection		

Cable: 2 m, PVC; 2 x 0.5 mm²

Connection

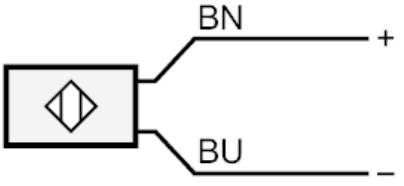

	Core colours :
BN =	brown
BU =	blue