NUP 2308 ECP

Popular item
SKF Explorer

Dimensions

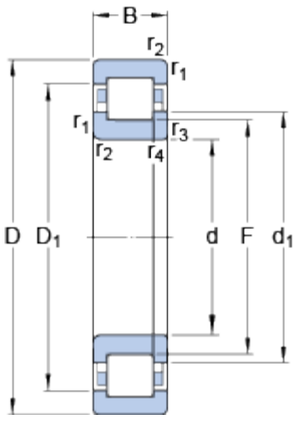

d		40	mm
D		90	mm
B		33	mm
d_1	≈	57.5	mm
D_1	≈	75.18	mm
F		52	mm
$r_{1,2}$	min.	1.5	mm
$r_{3,4}$	min.	1.5	mm

Abutment dimensions

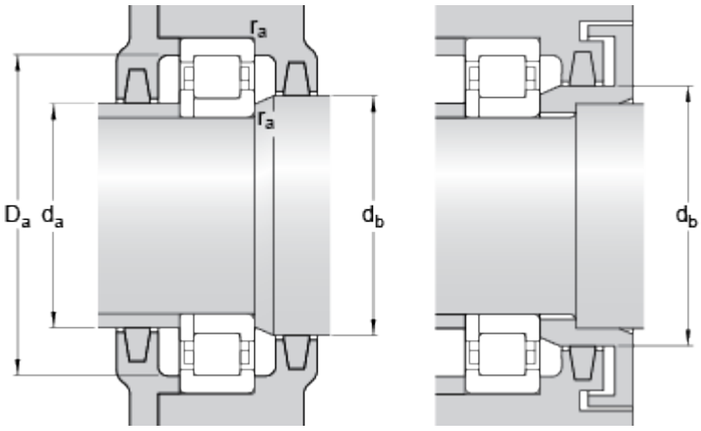

d_a	min.	48	mm
d_b	min.	60	mm
D_a	max.	81.8	mm
r_a	max.	1.5	mm

Calculation data

Basic dynamic load rating	C	129	kN
Basic static load rating	C_0	120	kN
Fatigue load limit	P_u	15.3	kN
Reference speed		8000	r/min
Limiting speed		9500	r/min
Calculation factor	k_r	0.25	
Limiting value	e	0.3	
Axial load factor	Y	0.4	

Mass

Mass bearing	0.98	kg