NU 204 ECP

SKF Explorer

Dimensions

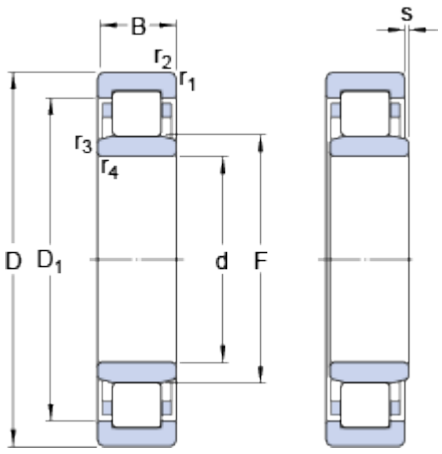

d		20	mm
D		47	mm
B		14	mm
D_1	≈	38.44	mm
F		26.5	mm
$r_{1,2}$	min.	1	mm
$r_{3,4}$	min.	0.6	mm
s		1	mm

Abutment dimensions

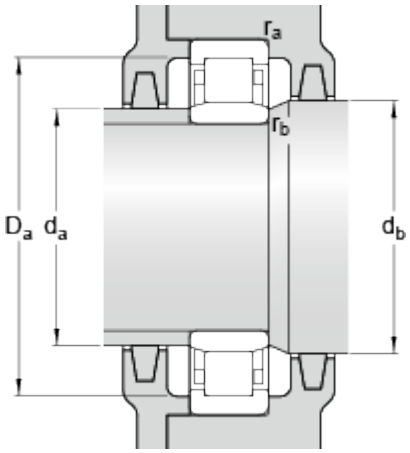

d_a	min.	24	mm
d_a	max.	25.4	mm
d_b	min.	28	mm
D_a	max.	41.7	mm
r_a	max.	1	mm
r_b	max.	0.6	mm

Calculation data

Basic dynamic load rating	C	28.5	kN
Basic static load rating	C_0	22	kN
Fatigue load limit	P_u	2.8	kN
Reference speed		17000	r/min
Limiting speed		19000	r/min
Calculation factor	k_r	0.15	

Mass

Mass bearing	0.109	kg