IM5123

Inductive sensor

IMC4020BCPKG/US-100-DPA

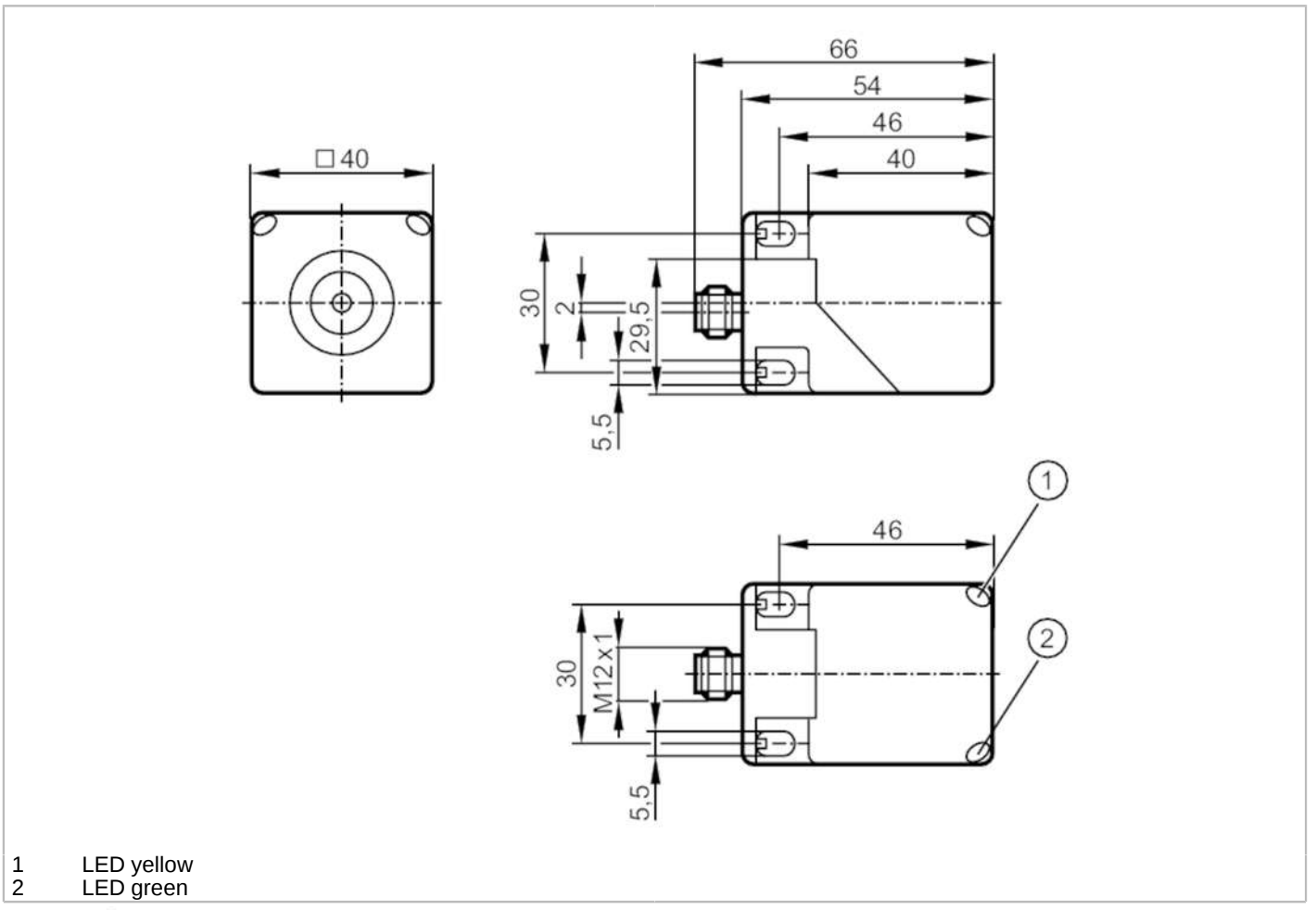

1 LED yellow
2 LED green

Product characteristics		
Electrical design		PNP
Output function		complementary
Sensing range	[mm]	20
Housing		rectangular
Dimensions	[mm]	40 x 40 x 54
Electrical data		
Operating voltage	[V]	10...36 DC
Current consumption	[mA]	< 25
Protection class		II
Reverse polarity protection		yes
Outputs		
Electrical design		PNP
Output function		complementary
Max. voltage drop switching output DC	[V]	2.5
Max. leakage current	[mA]	0.1
Permanent current rating of switching output DC	[mA]	200

IM5123

Inductive sensor

IMC4020BCPKG/US-100-DPA

Switching frequency DC	[Hz]	100	
Short-circuit protection		yes	
Type of short-circuit protection		pulsed	
Overload protection		yes	
Detection zone			
Sensing range	[mm]	20	
Operating distance	[mm]	0...16.2	
Accuracy / deviations			
Correction factor		steel: 1 / stainless steel: 0.7 / brass: 0.4 / aluminium: 0.4 / copper: 0.3	
Hysteresis	[% of Sr]	1...20	
Operating conditions			
Ambient temperature	[°C]	-25...70	
Protection		IP 67	
Tests / approvals			
EMC		EN 61000-4-2 ESD	8 kV CD / 6 kV AD
		EN 61000-4-3 HF radiated	10 V/m
		EN 61000-4-4 Burst	2 kV
		EN 61000-4-5 Surge	0,5 kV line to line, Ri: 2 Ohm
		EN 61000-4-6 HF conducted	10 V
		EN 55011	class B
MTTF	[years]	1270	
UL approval		Ta	-25...70 °C
		Enclosure type	Type 1
		power supply	Class 2
		File number UL	E174191
Mechanical data			
Weight	[g]	146.5	
Housing		rectangular	
Sensing face		5 positions selectable	
Mounting		flush mountable	
Dimensions	[mm]	40 x 40 x 54	
Materials		PA	
Displays / operating elements			
Display		switching status	1 x LED, yellow
		operation	1 x LED, green
Remarks			
Pack quantity		1 pcs.	

IM5123

Inductive sensor

IMC4020BCPKG/US-100-DPA

Electrical connection - plug

Connector: 1 x M12; coding: A; Locking: locking, rotatable

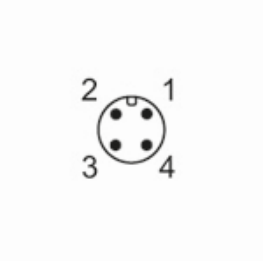

Connection

