Current Transducer HASS 50 .. 600-S

I_{PN} = 50 .. 600 A

For the electronic measurement of currents: DC, AC, pulsed..., with galvanic separation between the primary circuit and the secondary circuit.

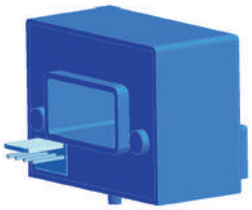

All data are given with R_L = 10 kΩ

Electrical data

Primary nominal rms current I_{PN} (A)	Primary current measuring range I_{PM} (A)	Type
50	±150	**HASS 50-S**
100	±300	**HASS 100-S**
200	±600	**HASS 200-S**
300	±900	**HASS 300-S**
400	±1100	**HASS 400-S**
500	±1100	**HASS 500-S**
600	±1100	**HASS 600-S**

G_{Th}	Theoretical sensitivity @ I_{PN}		0.625	V/ I_{PN}
V_{out}	Analog output voltage @ I_P		V_{OE} ±(0.625·I_P/ I_{PN})	V
V_{ref}	Reference voltage [1]	Output voltage	2.5 ±0.025	V
		Output impedance	typ. 200	Ω
		Load impedance	≥200	Ω
R_L	Load resistance		≥2	kΩ
R_{out}	Output internal resistance		<5	Ω
C_L	Capacitive loading (±20 %)		= 4.7	nF
U_C	Supply voltage (±5 %) [2]		5	V
I_C	Current consumption @ U_C = 5 V		19 (typ)	mA
			25 (max)	mA

Accuracy - Dynamic performance data

X	Accuracy [3] @ I_{PN}, T_A = 25° C			≤±1	%
ε_L	Linearity error	0 .. I_{PN}		≤±0.5	%
		0 .. I_{PM}		≤±1	%
TCV_{OE}	Temperature coefficient of V_{OE}	(V_{out} - V_{ref} @ I_P = 0)		≤±0.1	mV/K
TCV_{ref}	Temperature coefficient of V_{ref}			≤±190	ppm/K
TCG	Temperature coefficient of G			≤±250	ppm/K
V_{OE}	Electrical offset voltage @ I_P = 0, T_A = 25 °C			V_{ref} ±0.015	V
V_{OM}	Magnetic offset voltage @ I_P = 0 after an overload of I_{PM}			<±0.4	%
t_{ra}	Reaction time to 10 % of I_{PN} step			<3	µs
t_r	Step response time to 90 % of I_{PN}		**HASS 50-S**	<4	µs
			others	<3.5	µs
di/dt	di/dt accurately followed		I_{PN} ≥100 A	100	A/µs
			I_{PN} <100 A	I_{PN}	A/µs
V_{no}	Output voltage noise	(DC .. 20 MHz)		<40	mVpp
BW	Frequency bandwidth (-3 dB) [4]			DC .. 240	kHz

Features

- Hall effect measuring principle
- Galvanic separation between primary and secondary circuit
- Insulation test voltage 3300 V
- Low power consumption
- Single power supply +5 V
- Fixed offset & sensitivity
- Insulating plastic case recognized according to UL 94-V0.

Advantages

- Easy installation
- Small size and space saving
- Only one design for wide current ratings range
- High immunity to external interference
- Internal & external reference.

Applications

- AC variable speed drives and servo motor drives
- Static converters for DC motor drives
- Battery supplied applications
- Uninterruptible Power Supplies (UPS)
- Switched Mode Power Supplies (SMPS)
- Power supplies for welding applications.

Application domain

- Industrial.

74.71.25.000.0, 74.71.34.000.0, 74.71.44.000.0, 74.71.46.000.0, 74.71.48.000.0, 74.71.50.000.0, 74.71.52.000.0

Current Transducer HASS 50 .. 600-S

General data

T_A	Ambient operating temperature	-40 .. +105	°C
T_S	Ambient storage temperature	-40 .. +105	°C
m	Mass	55	g
	Standard	EN 50178: 1997	

Notes: [1] It is possible to overdrive V_{ref} with an external reference voltage between 0.5 - 2.65 V providing its ability to sink or source approximately 5 mA
[2] Maximum supply voltage (not operating) <6.5 V
[3] Excluding offset and magnetic offset voltage
[4] Small signal only to avoid excessive heatings of the magnetic core.

Insulation coordination

U_d	Rms voltage for AC insulation test, 50 Hz, 1 min	3.3	kV
U_e	Partial discharge extinction rms voltage @ 10 pC	>1	kV
$\hat{U}_W$	Impulse withstand voltage 1.2/50 µs	6	kV
		Min	
d_{Cp}	Creepage distance	>5.5	mm
d_{Cl}	Clearance distance	>5.5	mm
CTI	Comparative Tracking Index (group I)	>600	

Applications examples

According to EN 50178 and IEC 61010-1 standards and following conditions:

- Over voltage category OV 3
- Pollution degree PD2
- Non-uniform field

	EN 50178	IEC 61010-1
d_{Cp}, d_{Cl}, $\hat{U}_W$	Rated insulation voltage	Nominal voltage
Basic insulation	600 V	600 V
Reinforced insulation	300 V	150 V

Safety

This transducer must be used in limited-energy secondary circuits according to IEC 61010-1.



This transducer must be used in electric/electronic equipment with respect to applicable standards and safety requirements in accordance with the manufacturer's operating instructions.



Caution, risk of electrical shock
When operating the transducer, certain parts of the module can carry hazardous voltage (eg. primary busbar, power supply). Ignoring this warning can lead to injury and/or cause serious damage.
This transducer is a build-in device, whose conducting parts must be inaccessible after installation.A protective housing or additional shield could be used.
Main supply must be able to be disconnected.

Dimensions HASS 50 .. 600-S (in mm)

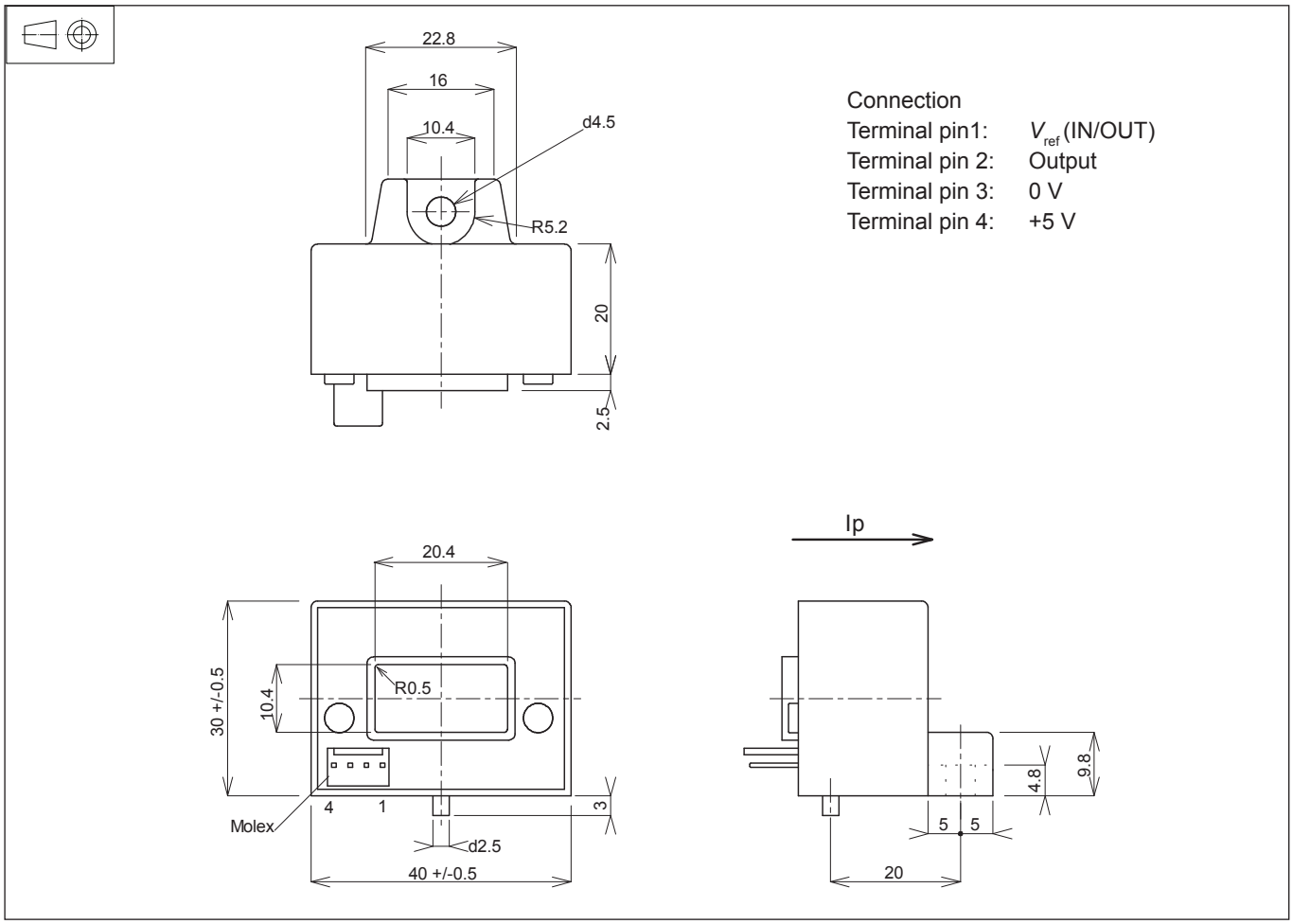

Required connection circuit

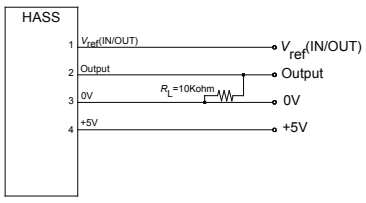

Operation principle

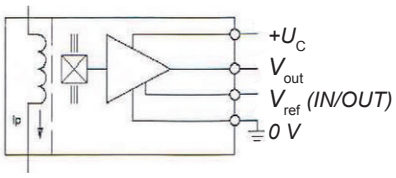

Mechanical characteristics

- General tolerance ±0.5 mm
- Aperture for primary conductor 20.4 × 10.4 × 0.5 mm
- Transducer fastening M4
- Recommended fastening torque <1.5 N·m
- Connection of secondary Molex 5045-04A

Remarks

- I_S is positive when I_P flows in the direction of the arrow.
- Temperature of the primary conductor should not exceed 120 °C.
- This is a standard model. For different versions (supply voltages, turns ratios, unidirectional measurements...), please contact us.
- Installation of the transducer must be done unless otherwise specified on the datasheet, according to LEM Transducer Generic Mounting Rules. Please refer to LEM document N°ANE120504 available on our Web site: **Products/Product Documentation.**