TCC261

Temperature transmitter

TCC250K1ED06-A-DKG/US

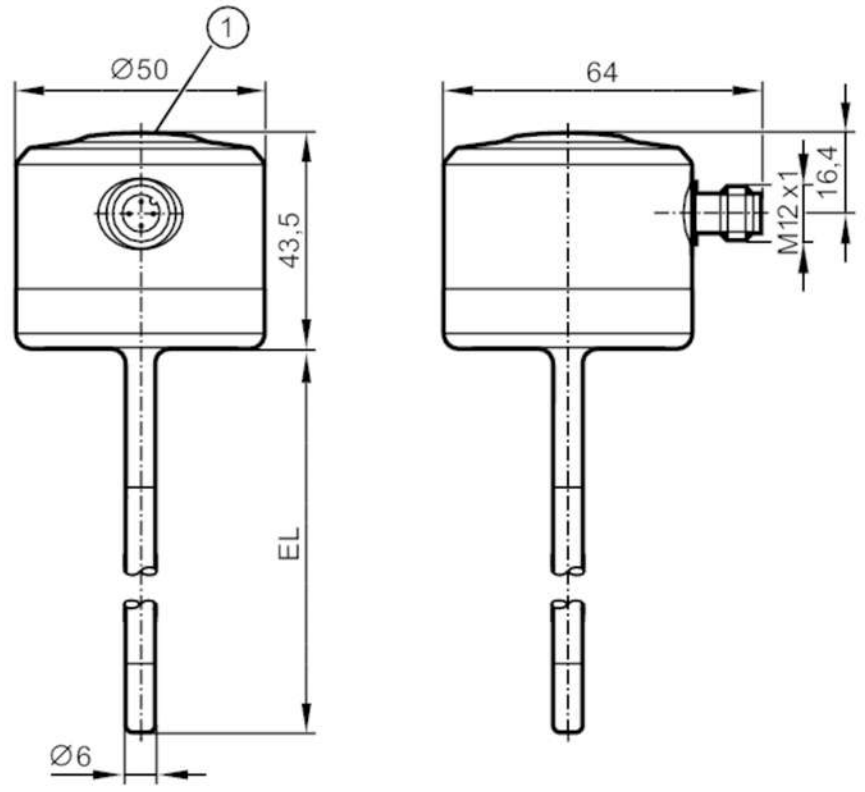

1 LED

Product characteristics			
Number of inputs and outputs		Number of digital outputs: 1; Number of analogue outputs: 1	
Measuring range		-25...160 °C	-13...320 °F
Communication interface		IO-Link	
Process connection		clamp adapter Ø 6 mm	
Installation length EL	[mm]	250	
Application			
Special feature		Gold-plated contacts	
Measuring element		1 x Pt 1000	
Reference element		1 x NTC	
Media		liquids and gases	
Pressure rating		160 bar	16 MPa
Electrical data			
Operating voltage	[V]	18...32 DC; ("supply class 2" to cULus)	
Current consumption	[mA]	10; (24 V)	
Protection class		III	
Reverse polarity protection		yes	
Power-on delay time	[s]	6	
Integrated watchdog		yes	

TCC261

Temperature transmitter

TCC250K1ED06-A-DKG/US

Inputs / outputs			
Number of inputs and outputs		Number of digital outputs: 1; Number of analogue outputs: 1	
Outputs			
Total number of outputs		2	
Output signal		analogue signal; IO-Link; calibration check status	
Electrical design		PNP/NPN	
Number of digital outputs		1	
Output function		normally closed; (diagnostic signal)	
Max. voltage drop switching output DC	[V]	2	
Permanent current rating of switching output DC	[mA]	100	
Diagnostic output		calibration check status and error diagnostics	
Number of analogue outputs		1	
Analogue current output	[mA]	4...20	
Max. load	[Ω]	(Ub - 15 V) x 50	
Short-circuit protection		yes	
Type of short-circuit protection		pulsed	
Overload protection		yes	
Measuring/setting range			
Probe length L	[mm]	250	
Measuring range		-25...160 °C	-13...320 °F
Note on measuring range		scalable	
Factory setting		-10...150 °C / 14...302 °F	
Calibration check limit	[K]	0.5...3	
In steps of	[K]	0.05	
Resolution			
Resolution of analogue output	[K]	0.05	
Accuracy / deviations			
Precision analogue output	[K]	± 0,2	
Precision IO-Link	[K]	± 0,2	
Temperature coefficient analogue output	[% of the span / 10 K]	< ± 0,02; (in case of deviation from the reference condition 25 ± 5 °C)	
Temperature coefficient IO-Link	[% of the span / 10 K]	< ± 0,01; (in case of deviation from the reference condition 25 ± 5 °C)	
Response times			
Dynamic response T05 / T09	[s]	1,5 / 4	
Software / programming			
Parameter setting options		Display unit; scaling of the analogue output; calibration check limit; switching logic diagnostic output; simulation mode	
Interfaces			
Communication interface		IO-Link	

TCC261

Temperature transmitter

TCC250K1ED06-A-DKG/US

Transmission type		COM2 (38,4 kBaud)	
IO-Link revision		1.1	
SDCI standard		IEC 61131-9 CDV	
Profiles		Digital Measuring Sensor, Common Profile, Blob Transfer	
SIO mode		yes	
Required master port type		A	
Process data analogue		1	
Process data binary		1	
Min. process cycle time	[ms]	4.4	
IO-Link resolution temperature	[K]	0.01	
Supported DeviceIDs		**Type of operation**	**DeviceID**
		default	1129
Operating conditions			
Ambient temperature	[°C]	-25...70	
Note on ambient temperature		max. internal device temperature: 125 °C	
Storage temperature	[°C]	-40...100	
Protection		IP 68; IP 69K	
Tests / approvals			
EMC		DIN EN 61000-6-2	
		DIN EN 61000-6-3	
Shock resistance		DIN EN 68000-2-27	50 g (11 ms)
Vibration resistance		DIN EN 60068-2-6	35 g (10...2000 Hz)
MTTF	[years]	329	
Note on approval		factory certificate available as download at www.factory-certificate.ifm	
UL approval		UL Approval no.	K021
		File number UL	E217884
Mechanical data			
Weight	[g]	271.9	
Housing		cylindrical	
Dimensions	[mm]	Ø 50 / L = 293.5	
Materials		stainless steel (316L/1.4404); PEI; FKM; PFA	
Materials (wetted parts)		stainless steel (316L/1.4404); PEEK	
Process connection		clamp adapter Ø 6 mm	
Surface characteristics Ra/Rz of the wetted parts		Ra: < 0.8	
Probe diameter	[mm]	6	
Installation length EL	[mm]	250	
Remarks			
Remarks		MS = set measuring span	
		operating voltage "supply class 2" according to cULus	
Pack quantity		1 pcs.	

TCC261

Temperature transmitter

TCC250K1ED06-A-DKG/US

Electrical connection

Connector: 1 x M12; coding: A; Contacts: gold-plated

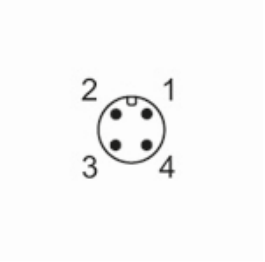

Connection

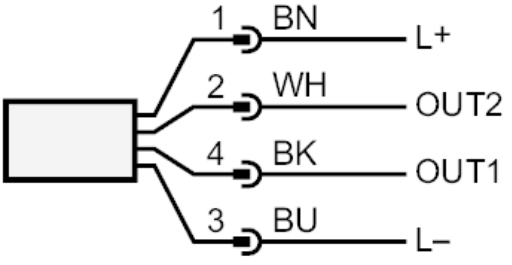

OUT2:	analogue output
OUT1:	Diagnostic output / IO-Link