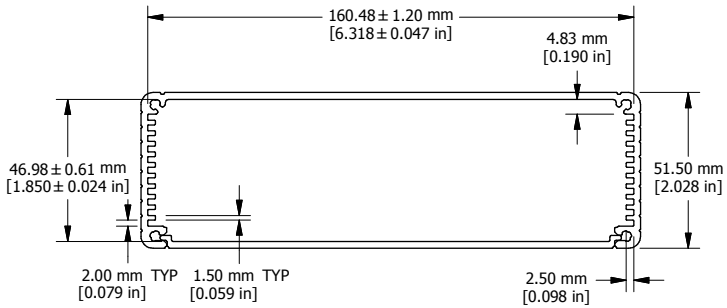

EXTRUSION

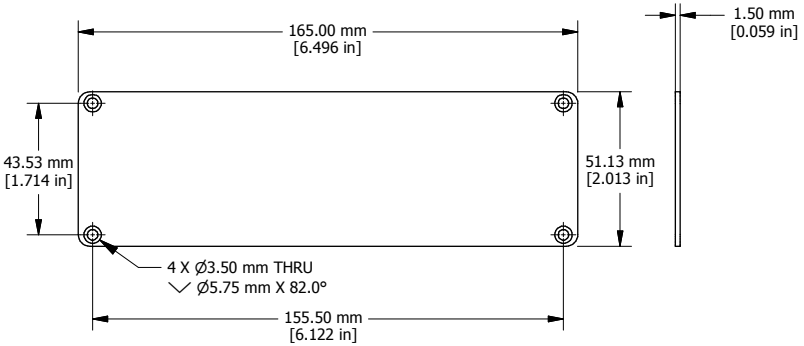

END PLATE

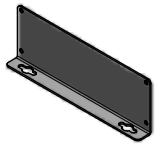

OPTIONAL FLANGE
END PANELS 1455TF

EXTRUSION DESIGNED FOR 160MM WIDE P BOARD

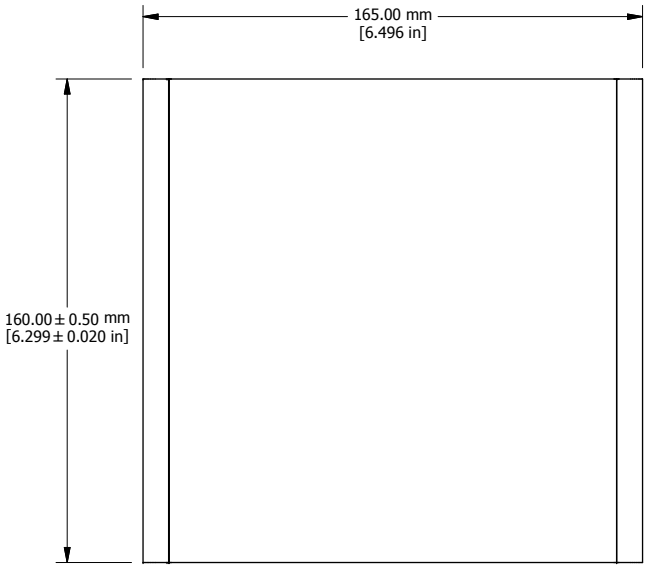

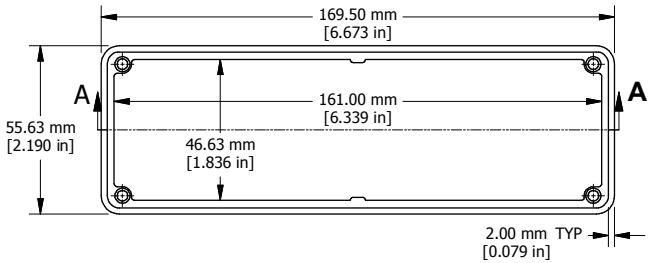

OPEN BEZEL

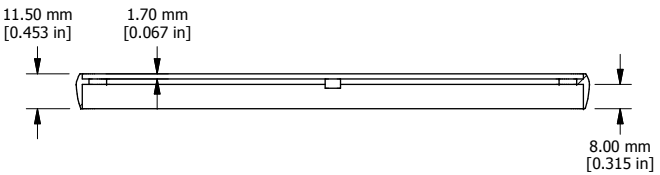

SECTION A-A

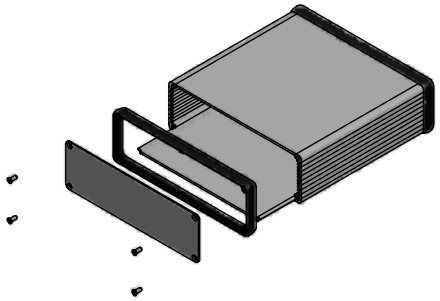

EXPLODED ASSEMBLY VIEW

Enclosures can be Factory Modified (Milling, Drilling, Printing etc.)
Solid models of this enclosure available in STEP or IGES.
Contact Factory mjm@hammondmfg.com

NOTE
Purchased assembly includes box, plastic bezels, end panels, #6 Taptight screws and self adhesive rubber feet.
Box made from Extruded Aluminum 6063.
Bezels made with polycarbonate.

1455T1601	
PART NUMBERS	
Clear Anodized	1455T1601
Black Anodized	1455T1601BK
Blue Anodized	1455T1601BU
Red Anodized	1455T1601RD
ACCESSORIES	
See website for accessories.	

HAMMOND MANUFACTURING™

1455T1601

www.hammondmfg.com