# Extended/Direct Handle Motor Disconnect Switch

The KU/VKA...N series can be used with extended and direct handles (see page 8-9 for details).

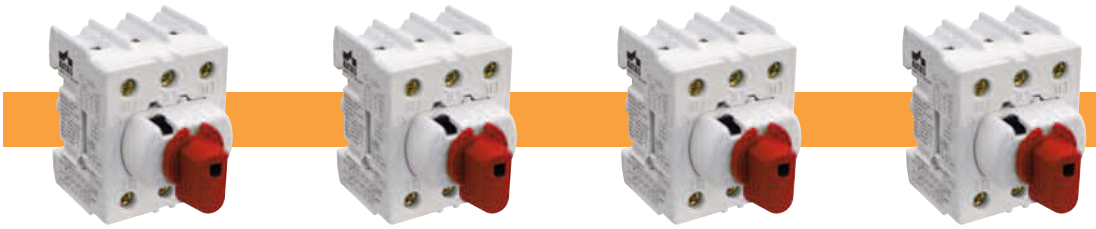

E185115

| Catalog Number | KU316N | KU325N | KU340N | KU363N |
|---|---|---|---|---|
| No. of Poles | 3 (4 pole - KU416N) | 3 (4 pole - KU425N) | 3 (4 pole - KU440N) | 3 (4 pole - KU463N) |
| General Purpose Current | 16A | 25A | 40A | 60A |
| Maximum Voltage | 600V AC | 600V AC | 600V AC | 600V AC |
| Motor FLA @ 480V AC | 14A | 17.5A | 28A | 34A |
| Motor FLA @ 600V AC | 9A | 11A | 18A | 27A |

| Horsepower Rating /HP | 1 Phase | 3 Phase | 1 Phase | 3 Phase | 1 Phase | 3 Phase | 1 Phase | 3 Phase |
|---|---|---|---|---|---|---|---|---|
| 110-120V AC | 3/4 | 1 1/2 | 1 | 2 | 2 | 3 | 3 | 5 |
| 200V AC | 2 | 3 | 2 | 5 | 3 | 7.5 | 5 | 10 |
| 208V AC | 2 | 3 | 2 | 5 | 3 | 7.5 | 5 | 10 |
| 220-240V AC | 2 | 3 | 3 | 7.5 | 5 | 10 | 5 | 10 |
| 265V AC | 2 | 3 | 3 | 7.5 | 5 | 10 | 5 | 10 |
| 277V AC | 2 | 3 | 3 | 7.5 | 5 | 10 | 7.5 | 10 |
| 380-415V AC | 3 | 7.5 | 5 | 10 | 7.5 | 15 | 10 | 20 |
| 440-480V AC | 5 | 10 | 7.5 | 15 | 10 | 20 | 15 | 25 |
| 550-600V AC | 3 | 7.5 | 5 | 10 | 7.5 | 15 | 15 | 25 |

| Short Circuit Withstand Rating at 600 V with Max. Fuse Size/Class: | 10kA | 10kA | 10kA | 10kA |
|---|---|---|---|---|
| K5 | 50A | 50A | 50A | 60A |
| RK5 | 50A | 50A | 50A | 60A (80A@480V AC) |
| RK1 | 80A | 80A | 80A | 100A |
| J | 80A | 80A | 80A | 100A |
| **Terminal Size Acceptability** (Cu Conductors only, 75°C) | 14-8AWG | 14-8AWG | 14-8AWG | 12-4AWG |
| **Terminal Torque** | 16 lb. in. | 16 lb. in. | 16 lb. in. | 16 lb. in. |

**Dimensions**

*(to convert to inches multiply by 0.03937)*

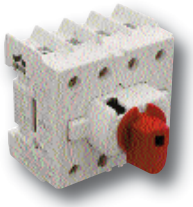

4 Pole

**3 Pole**

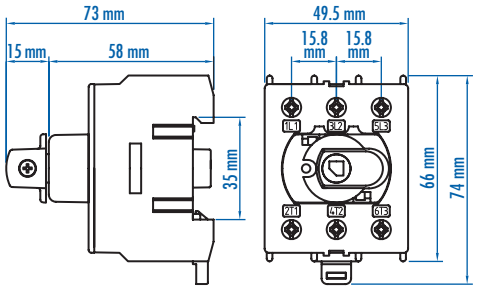


**4 Pole**

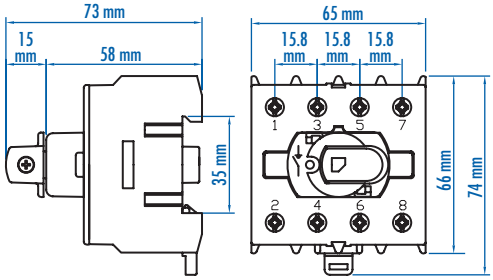


| Weight | 0.19Kg (0.419lb.) (3 pole)<br>0.23Kg (0.507lb.) (4 pole) | 0.172Kg (0.379lb.) (3 pole)<br>0.215Kg (0.474lb.) (4 pole) | 0.172Kg (0.379lb.) (3 pole)<br>0.215Kg (0.474lb.) (4 pole) | 0.200Kg (0.441lb.) (3 pole)<br>0.245Kg (0.540lb.) (4 pole) |
|---|---|---|---|---|

## Suitable Accessories

| Extended Handle Version/ Door Interlock Mechanism | | | | |
|---|---|---|---|---|
| Shaft | L(1,2,3)00AD11-ST | L(1,2,3)00AD11-ST | L(1,2,3)00AD11-ST | L(1,2,3)00AD11-ST |
| Handles | LK10 (Y/R) UL, LK11 (Y/R) U | LK10 (Y/R) UL, LK11 (Y/R) U | LK10 (Y/R) UL, LK11 (Y/R) U | LK10 (Y/R) UL, LK11 (Y/R) U |
| Auxiliary Switch | KU1.V, KU2.V | KU1.V, KU2.V | KU1.V, KU2.V | KU1.V, KU2.V |
| Fuse Holder | — | — | KV 10x38, KV 10x38 CC | — |
| **Direct Handle Version** | | | | |
| Handle for 3 Pole | K/KU3P (Y/R) | K/KU3P (Y/R) | K/KU3P (Y/R) | K/KU3P (Y/R) |
| Handle for 4 Pole | K/KU4P (Y/R) | K/KU4P (Y/R) | K/KU4P (Y/R) | K/KU4P (Y/R) |
| Door Mounting Kits | OKA/KU LK10 x; OKA x | OKA/KU LK10 x; OKA x | OKA/KU LK10 x; OKA x | OKA/KU LK10 x; OKA x |

# Extended/Direct Handle Motor Disconnect Switch

The KU/VKA...N series can be used with extended and direct handles (see page 8-9 for details).

E185115

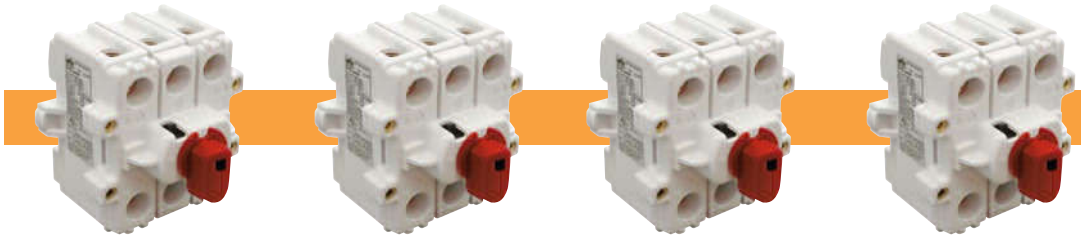

| Catalog Number | VKA380N | VKA3100N | VKA3125N | VKA3160N |
|---|---|---|---|---|
| No. of Poles | 3 (4 pole - VKA480N) | 3 (4 pole - VKA4100N) | 3 (4 pole - VKA4125N) | 3 (4 pole - VKA4160N) |
| General Purpose Current | 80A | 100A | 125A | 150A |
| Maximum Voltage | 600V AC | 600V AC | 600V AC | 600V AC |
| Motor FLA @ 480V AC | – | – | – | – |
| Motor FLA @ 600V AC | 47A | 54A | 68A | 83A |

| Horsepower Rating /HP | 1 Phase | 3 Phase | 1 Phase | 3 Phase | 1 Phase | 3 Phase | 1 Phase | 3 Phase |
|---|---|---|---|---|---|---|---|---|
| 110-120V AC | 3 | 7.5 | 3 | 7.5 | 5 | 10 | 7.5 | 10 |
| 200V AC | 7.5 | 10 | 7.5 | 15 | 10 | 20 | 10 | 25 |
| 208V AC | 7.5 | 15 | 7.5 | 15 | 10 | 20 | 10 | 25 |
| 220-240V AC | 7.5 | 15 | 10 | 20 | 15 | 25 | 15 | 30 |
| 265V AC | 10 | 20 | 10 | 20 | 15 | 25 | 20 | 30 |
| 277V AC | 10 | 20 | 10 | 20 | 15 | 30 | 20 | 30 |
| 380-415V AC | 15 | 25 | 15 | 30 | 20 | 40 | 25 | 50 |
| 440-480V AC | 20 | 30 | 20 | 40 | 25 | 50 | 30 | 60 |
| 550-600V AC | 25 | 40 | 30 | 50 | 30 | 60 | 40 | 75 |

| Short Circuit Withstand Rating at 600 V with Max. Fuse Size/Class: | 10kA | 10kA | 10kA | 10kA |
|---|---|---|---|---|
| K5 | 150A | 150A | 150A | 150A |
| RK5 | 150A | 150A | 150A | 150A |
| RK1 | – | – | – | – |
| J | 200A | 200A | 200A | 200A |
| **Terminal Size Acceptability** (Cu Conductors only, 75°C) | 4-1/0AWG | 4-1/0AWG | 4-1/0AWG | 4-1/0AWG |
| **Terminal Torque** | 50 lb. in. | 50 lb. in. | 50 lb. in. | 50 lb. in. |

**Dimensions**

*(to convert to inches multiply by 0.03937)*

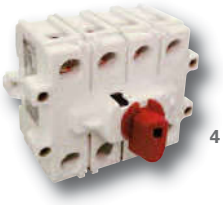

4 Pole

**3 Pole**

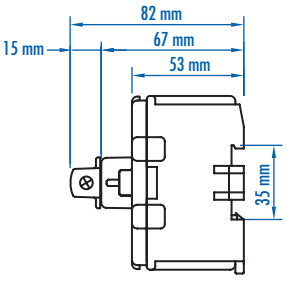


**4 Pole**

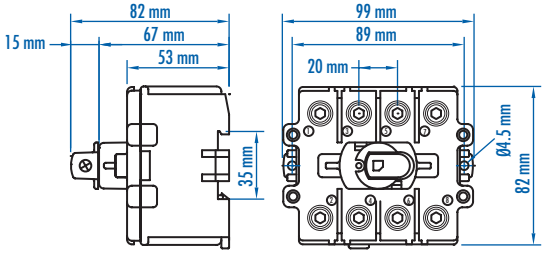


| Weight | 0.480Kg (1.058lb.) (3 pole)<br>0.620Kg (1.367lb.) (4 pole) | 0.480Kg (1.058lb.) (3 pole)<br>0.620Kg (1.367lb.) (4 pole) | 0.480Kg (1.058lb.) (3 pole)<br>0.620Kg (1.367lb.) (4 pole) | 0.480Kg (1.058lb.) (3 pole)<br>0.620Kg (1.367lb.) (4 pole) |
|---|---|---|---|---|

## Suitable Accessories

| Extended Handle Version/ Door Interlock Mechanism | | | | |
|---|---|---|---|---|
| Shaft | L(1,2.3)00AD11-ST | L(1,2.3)00AD11-ST | L(1,2.3)00AD11-ST | L(1,2.3)00AD11-ST |
| Handles | LK10 (Y/R) UL, LK11 (Y/R) U | LK10 (Y/R) UL, LK11 (Y/R) U | LK10 (Y/R) UL, LK11 (Y/R) U | LK10 (Y/R) UL, LK11 (Y/R) U |
| Auxiliary Switch | VKA1.V, VKA2.V | VKA1.V, VKA2.V | VKA1.V, VKA2.V | VKA1.V, VKA2.V |
| Fuse Holder | – | – | – | – |
| **Direct Handle Version** | | | | |
| Handle for 3 & 4 Pole | K/VKA3-4P (Y/R) | K/VKA3-4P (Y/R) | K/VKA3-4P (Y/R) | K/VKA3-4P (Y/R) |
| Door Mounting Kits | OKA/VKA x | OKA/VKA x | OKA/VKA x | OKA/VKA x |

**Dimensions** *(to convert to inches multiply by 0.03937)*

# Extended Handle Accessories

## DOOR INTERLOCK HANDLES with 3 padlock locations*

E185115

**LK10 (Y/R) UL:**
- *Single hole mounting (22.5mm)*
- *Defeatable (built-in mechanism)*

**LK11 (Y/R) U:**
- *Retention mechanism (only rotates 90° from off to on, keeps handle in off position while cabinet door is open)*
- *Defeatable (looses NEMA rating)*



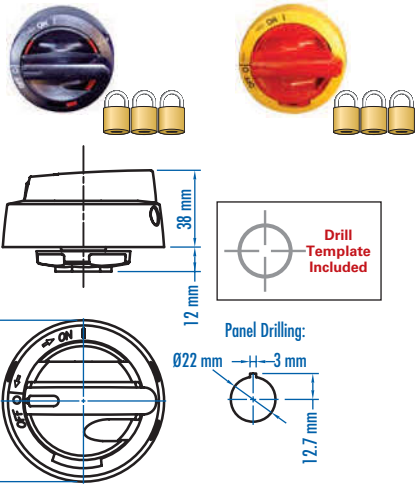


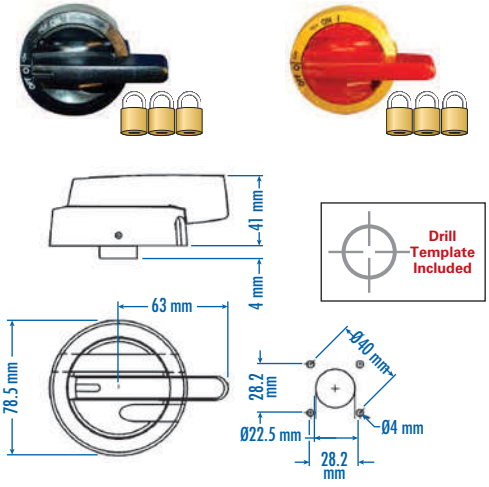


| Cat. No. | LK10 UL | LK10 Y/R UL | LK11 U | LK11 Y/R U |
|---|---|---|---|---|
| **Environmental Rating** | NEMA Type 4X, IP66 | NEMA Type 4X, IP66 | NEMA Type 4X, IP67 | NEMA Type 4X, IP67 |
| **Color** | Black | Yellow/Red | Black | Yellow/Red |

## DOOR INTERLOCK SHAFT

*The steel shaft ensures reliable operation even in the toughest conditions.*

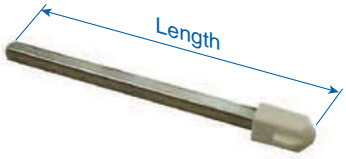


| Cat. No. | L100AD11-ST | L200AD11-ST | L300AD11-ST |
|---|---|---|---|
| **Length (L)** | 100mm | 200mm | 300mm |
| **Material** | Steel | Steel | Steel |

## SHAFT CUTTING RECOMMENDATIONS

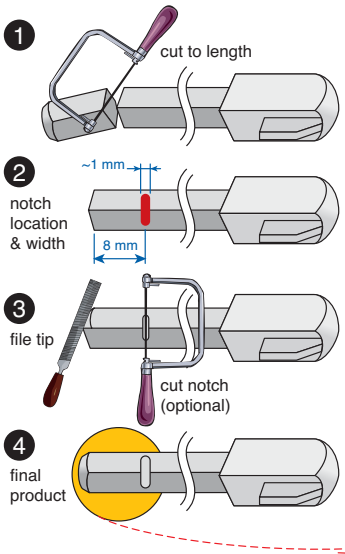


## SHAFT LENGTH GUIDELINE

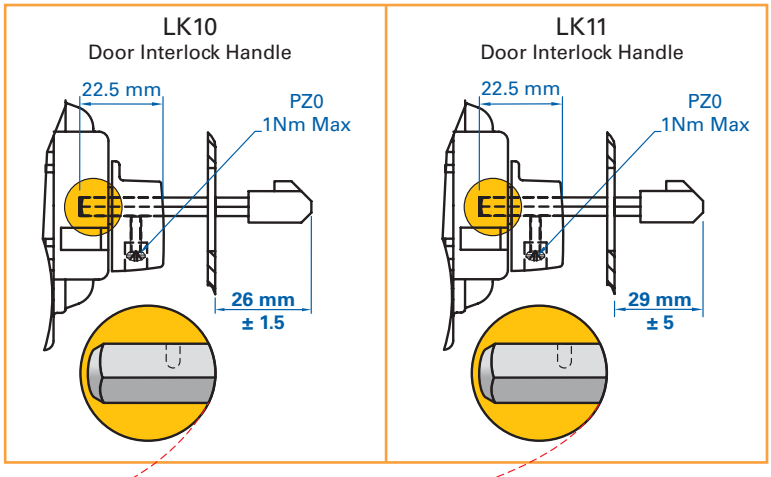


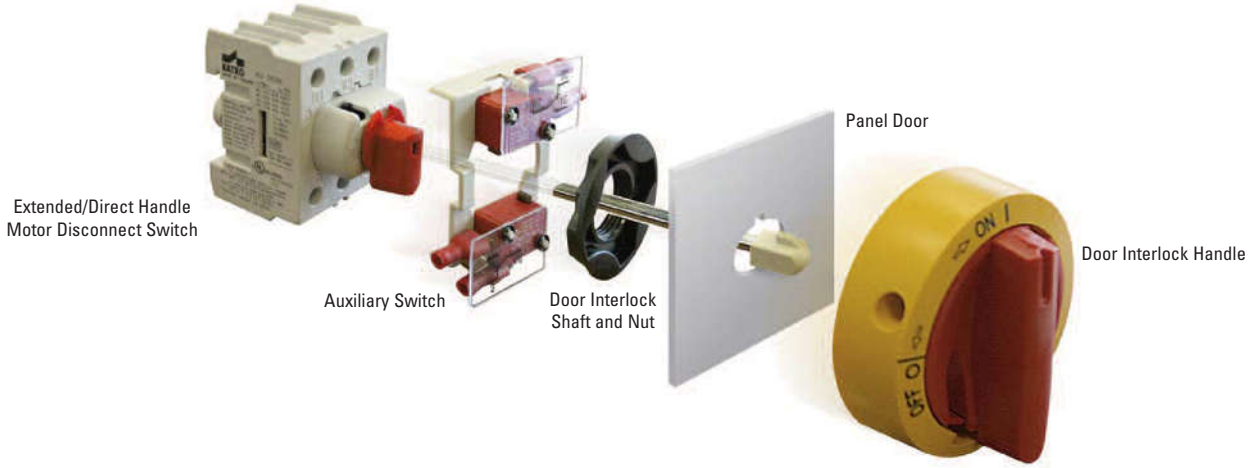


*1/4" padlocks not included.

**Dimensions** *(to convert to inches multiply by 0.03937)*

# Extended Handle Accessories

## AUXILIARY SWITCHES

*The auxiliary switches are the snap-on type and can be retrofitted.*






| Cat. No. | KU1.V | KU2.V | VKA1.V | VKA2.V |
|---|---|---|---|---|
| Electrical Rating | 10A/1/2HP/125-250V AC | 10A/1/2HP/125-250V AC | 10A/1/2HP/125-250V AC | 10A/1/2HP/125-250V AC |
| No. of contacts | 1n.o./1n.c. | 2n.o./2n.c. | 1n.o./1n.c. | 2n.o./2n.c. |
| For Use With | KU models | KU models | VKA models | VKA models |

## FUSE HOLDER

*This fuseholder can be retrofitted with the KU340N. Therefore design changes can be incorporated with ease to allow a fusible disconnect.*

c UL US LISTED
E185115



*Kit shown; comes with KU340N and fuse holder.*




| Cat. No. | KKV 332 | KKV 332CC | KV 10x38 | KV 10x38 CC |
|---|---|---|---|---|
| Electrical Rating | 30A/600V AC | 30A/600V AC | 30A/600V AC | 30A/600V AC |
| Fuse Type | 10x38, Midget | Class CC | 10x38, Midget | Class CC |
| For Use With | – | – | KU340N | KU340N |
| Kit Includes | KV 10x38 / KU340N | KV 10x38 CC / KU340N | – | – |

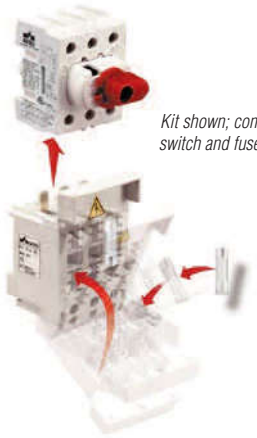
*Kit shown; comes with switch and fuse holder.*

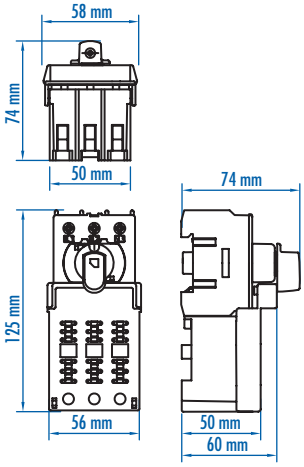


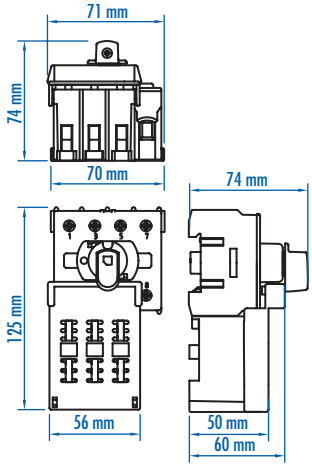


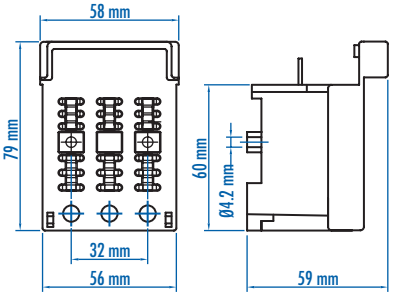


## CHANGE-OVER KITS

- For 2 KU switches
- Available with black or yellow/red handle (Y/R)



| Cat. No. | KU3/4P VV |
|---|---|
| Color | Black |
| Cat. No. | KU3/4P VV Y/R |
| Color | Yellow/Red |

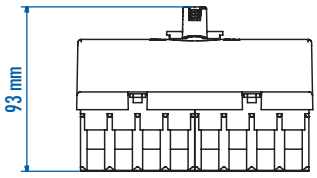


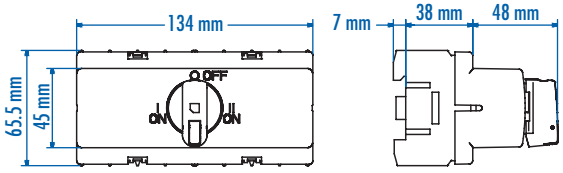


## PARALLEL KITS

- For KU and VKA-switches
- Assembly depth for KU 155-300 mm
- Assembly depth for VKA 164-310 mm

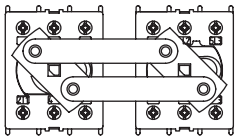


Center pivoting model available, contact Altech.

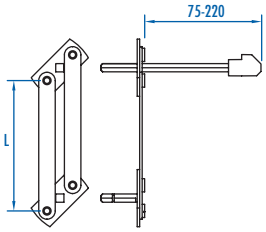


| Cat. No. | Length (L) | For use with |
|---|---|---|
| RV 66S-ST | 66 mm | 2x KU 3 pole (3P) |
| RV 80S-ST | 80 mm | 2x KU 4P/VKA 3P |
| RV 104S-ST | 104 mm | 2x VKA 4P |

**Dimensions** *(to convert to inches multiply by 0.03937)*

# Direct Handle Accessories and Mounting Alternatives

## DIRECT HANDLES

Improved design with metal shaft. Use for all your "inside the panel" applications. 1 suitcase lock location.



| Cat. No. | K/KU3P | K/KU3PY/R |
|---|---|---|
| Color | Black | Yellow/Red |
| For use with | KU models (3P) | KU models (3P) |

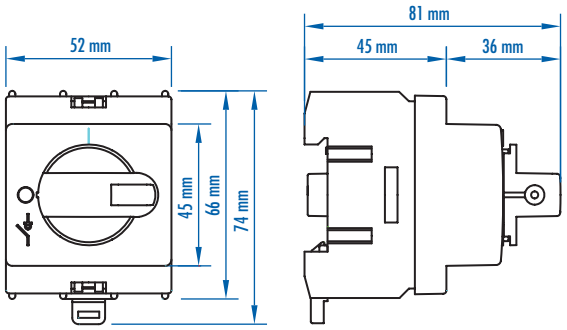




| Cat. No. | K/KU4P | K/KU4PY/R |
|---|---|---|
| Color | Black | Yellow/Red |
| For use with | KU models (4P) | KU models (4P) |

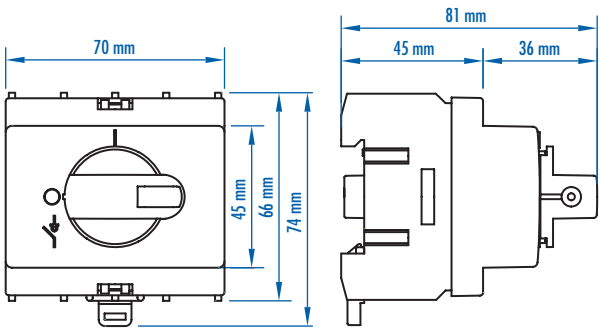




| Cat. No. | K/VKA3-4P | K/VKA3-4PY/R |
|---|---|---|
| Color | Black | Yellow/Red |
| For use with | VKA models (3/4P) | VKA models (3/4P) |

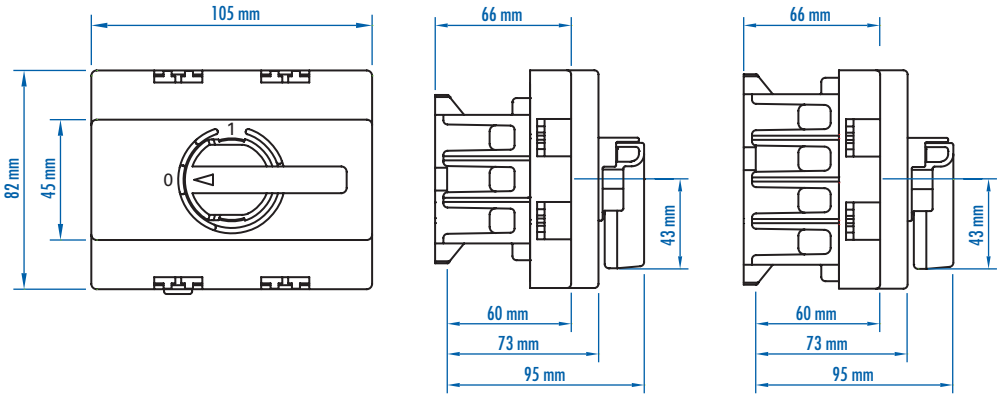


## ALUMINUM DIN RAIL

*Panel mount option for small Disconnect Switches.*



| Cat. No. | RKA 3P | RKA 4P |
|---|---|---|
| For Use With | KU325/40/63N | KU425/40/63N |

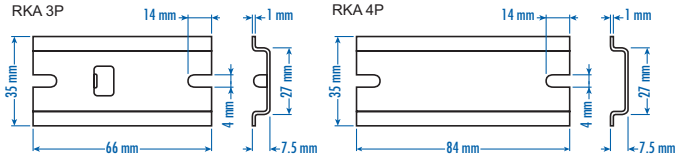


## NOTE:

*In the rare case that your mounting hardware (screws) for DIN Rail interfere with the enforcement studs in the back of the Motor Disconnect Switch please use smaller (≤M3 or equivalent) flathead screws or change your DIN Rail to the 15mm high version.*

**Dimensions** *(to convert to inches multiply by 0.03937)*

# Door Mounting Kits

*Designed for fast and easy assembly.*

## OKA/KU LK10 Series

**Environmental ratings: NEMA Type 4X, IP66; 3 padlock locations*.**




c UL us E185115

*Shown with switch and display plate. (sold separately)*




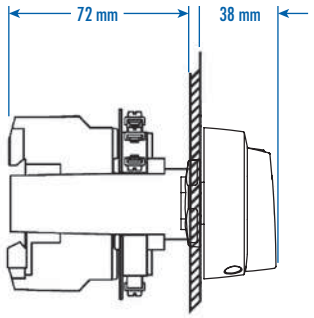


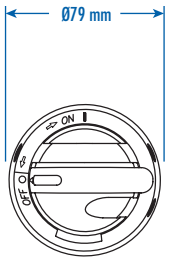


| Cat. No. (Black Handle) | Cat. No. (Yellow/Red Handle) | No. of aux. switches | For use with |
|---|---|---|---|
| OKA/KU LK10 | OKA/KU LK10 Y/R | 0 | 3 Pole KU switch |
| OKA/KU LK10 1.V | OKA/KU LK10 1.V Y/R | 1 | 3 Pole KU switch |
| OKA/KU LK10 2.V | OKA/KU LK10 2.V Y/R | 2 | 3 Pole KU switch |
| OKA/KU4P LK10 | OKA/KU4P LK10 Y/R | 0 | 4 Pole KU switch |
| OKA/KU4P LK10 1.V | OKA/KU4P LK10 1.V Y/R | 1 | 4 Pole KU switch |
| OKA/KU4P LK10 2.V | OKA/KU4P LK10 2.V Y/R | 2 | 4 Pole KU switch |

## OKA Series

**Environmental ratings: IP65; 3 padlock locations*.**

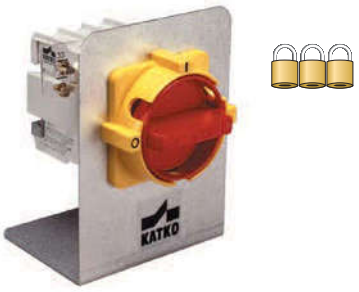


*Shown with switch and display plate. (sold separately)*




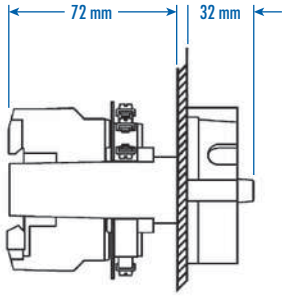


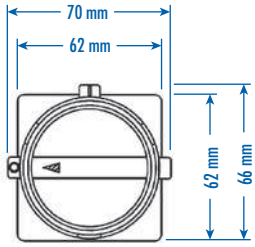


| Cat. No. (Black Handle) | Cat. No. (Yellow/Red Handle) | No. of aux. switches | For use with |
|---|---|---|---|
| OKA 0.V | OKA 0.V Y/R | 0 | 3 Pole KU switch |
| OKA 1.V | OKA 1.V Y/R | 1 | 3 Pole KU switch |
| OKA 2.V | OKA 2.V Y/R | 2 | 3 Pole KU switch |

## OKA/VKA Series

**Environmental ratings: NEMA Type 4X, IP67; 3 padlock locations*.**

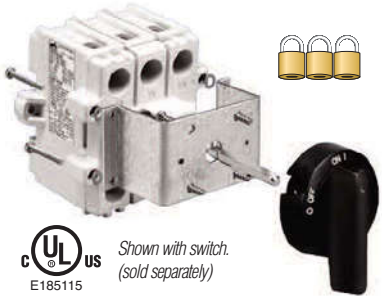

c UL us E185115

*Shown with switch. (sold separately)*




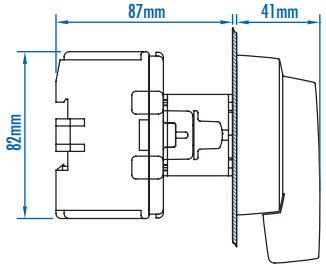


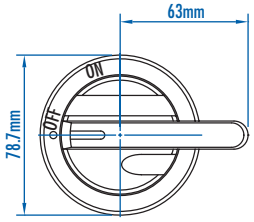


| Cat. No. (Black Handle) | Cat. No. (Yellow/Red Handle) | No. of aux. switches | For use with |
|---|---|---|---|
| OKA/VKA 0.V | OKA/VKA 0.V Y/R | 0 | 3 Pole VKA switch |
| OKA/VKA 1.V | OKA/VKA 1.V Y/R | 1 | 3 Pole VKA switch |
| OKA/VKA 2.V | OKA/VKA 2.V Y/R | 2 | 3 Pole VKA switch |
| OKA/VKA4P 0.V | OKA/VKA4P 0.V Y/R | 0 | 4 Pole VKA switch |
| OKA/VKA4P 1.V | OKA/VKA4P 1.V Y/R | 1 | 4 Pole VKA switch |
| OKA/VKA4P 2.V | OKA/VKA4P 2.V Y/R | 2 | 4 Pole VKA switch |

*1/4" padlocks not included.

**Dimensions** *(to convert to inches multiply by 0.03937)*

# Toggle Handle Motor Disconnect Switch

*The KUE series only requires an additional cover plate (see below) which makes the switch IP20 touch proof.*

E185115

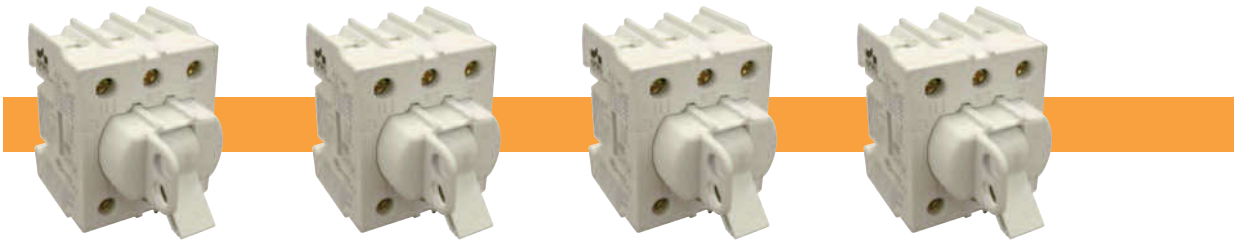

| **Catalog Number** | KUE316 | | KUE325 | | KUE340 | | KUE363 | |
|---|---|---|---|---|---|---|---|---|
| No. of Poles | 3 | | 3 | | 3 | | 3 | |
| General Purpose Current | 16A | | 25A | | 40A | | 60A | |
| Maximum Voltage | 600V AC | | 600V AC | | 600V AC | | 600V AC | |
| Motor FLA @ 480V AC | 14A | | 17.5A | | 28A | | 34A | |
| Motor FLA @ 600V AC | 9A | | 11A | | 18A | | 27A | |
| **Horsepower Rating /HP** | 1 Phase | 3 Phase | 1 Phase | 3 Phase | 1 Phase | 3 Phase | 1 Phase | 3 Phase |
| 110-120V AC | 3/4 | 1 1/2 | 1 | 2 | 2 | 3 | 3 | 5 |
| 200V AC | 2 | 3 | 2 | 5 | 3 | 7.5 | 5 | 10 |
| 208V AC | 2 | 3 | 2 | 5 | 3 | 7.5 | 5 | 10 |
| 220-240V AC | 2 | 3 | 3 | 7.5 | 5 | 10 | 5 | 10 |
| 265V AC | 2 | 3 | 3 | 7.5 | 5 | 10 | 5 | 10 |
| 277V AC | 2 | 3 | 3 | 7.5 | 5 | 10 | 7.5 | 10 |
| 380-415V AC | 3 | 7.5 | 5 | 10 | 7.5 | 15 | 10 | 20 |
| 440-480V AC | 5 | 10 | 7.5 | 15 | 10 | 20 | 15 | 25 |
| 550-600V AC | 3 | 7.5 | 5 | 10 | 7.5 | 15 | 15 | 25 |
| **Short Circuit Withstand Rating at 600 V with Max. Fuse Size/Class:** | 10kA | | 10kA | | 10kA | | 10kA | |
| K5 | 50A | | 50A | | 50A | | 60A | |
| RK5 | 50A | | 50A | | 50A | | 60A (80A@480V AC) | |
| RK1 | 80A | | 80A | | 80A | | 100A | |
| J | 80A | | 80A | | 80A | | 100A | |
| **Terminal Size Acceptability** (Cu Conductors only, 75°C) | 14-8AWG | | 14-8AWG | | 14-8AWG | | 12-4AWG | |
| **Terminal Torque** | 16 lb. in. | | 16 lb. in. | | 16 lb. in. | | 16 lb. in. | |

**Dimensions**
*(to convert to inches multiply by 0.03937)*

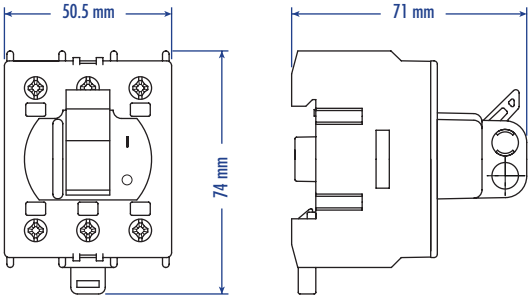


| **Weight** | 0.19Kg (0.419lb.) | 0.172Kg (0.379lb.) | 0.172Kg (0.379lb.) | 0.200Kg (0.441lb.) |
|---|---|---|---|---|

**Suitable Accessories**
**Cover Plate**



| **Cat. No.** | K/KUE | K/KUEY | R/KUE | R/KUEY |
|---|---|---|---|---|
| **Color** | Grey | Yellow | Grey | Yellow |
| **Shape** | Rectangular | Rectangular | Circular | Circular |

**Dimensions** *(to convert to inches multiply by 0.03937)*

# Toggle Handle Motor Disconnect Switch

*The EVA series includes a cover plate.*

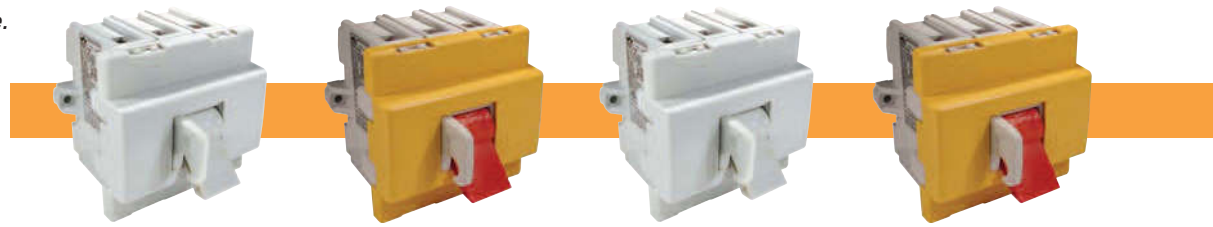

E185115

| **Catalog Number** | | | | |
|---|---|---|---|---|
| White Cover/ White Handle | EVA380 + K/EVA | EVA3100 + K/EVA | EVA3125 + K/EVA | EVA3160 + K/EVA |
| Yellow Cover/ Red Handle | EVA380 + K/EVA Y/R | EVA3100 + K/EVA Y/R | EVA3125 + K/EVA Y/R | EVA3160 + K/EVA Y/R |
| No. of Poles | 3 | 3 | 3 | 3 |
| General Purpose Current | 80A | 100A | 125A | 150A |
| Maximum Voltage | 600V AC | 600V AC | 600V AC | 600V AC |
| Motor FLA @ 480V AC | — | – | – | – |
| Motor FLA @ 600V AC | 47A | 54A | 68A | 83A |

| **Horsepower Rating /HP** | 1 Phase | 3 Phase | 1 Phase | 3 Phase | 1 Phase | 3 Phase | 1 Phase | 3 Phase |
|---|---|---|---|---|---|---|---|---|
| 110-120V AC | 3 | 7.5 | 3 | 7.5 | 5 | 10 | 7.5 | 10 |
| 200V AC | 7.5 | 10 | 7.5 | 15 | 10 | 20 | 10 | 25 |
| 208V AC | 7.5 | 15 | 7.5 | 15 | 10 | 20 | 10 | 25 |
| 220-240V AC | 7.5 | 15 | 10 | 20 | 15 | 25 | 15 | 30 |
| 265V AC | 10 | 20 | 10 | 20 | 15 | 25 | 20 | 30 |
| 277V AC | 10 | 20 | 10 | 20 | 15 | 30 | 20 | 30 |
| 380-415V AC | 15 | 25 | 15 | 30 | 20 | 40 | 25 | 50 |
| 440-480V AC | 20 | 30 | 20 | 40 | 25 | 50 | 30 | 60 |
| 550-600V AC | 25 | 40 | 30 | 50 | 30 | 60 | 40 | 75 |

| **Short Circuit Withstand Rating at 600 V with Max. Fuse Size/Class:** | 10kA | 10kA | 10kA | 10kA |
|---|---|---|---|---|
| K5 | 150A | 150A | 150A | 150A |
| RK5 | 150A | 150A | 150A | 150A |
| RK1 | — | – | – | – |
| J | 200A | 200A | 200A | 200A |

| **Terminal Size Acceptability** (Cu Conductors only, 75°C) | 4-1/0AWG | 4-1/0AWG | 4-1/0AWG | 4-1/0AWG |
|---|---|---|---|---|
| **Terminal Torque** | 50 lb. in. | 50 lb. in. | 50 lb. in. | 50 lb. in. |

**Dimensions**
*(to convert to inches multiply by 0.03937)*

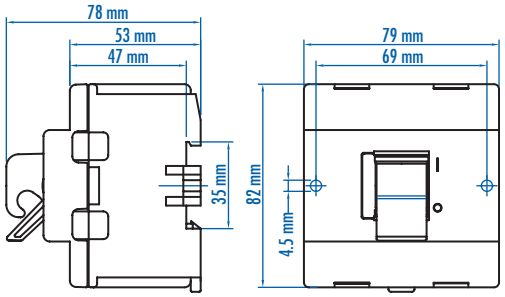


| **Weight** | 0.480Kg (1.058lb.) (3 pole) | 0.480Kg (1.058lb.) (3 pole) | 0.480Kg (1.058lb.) (3 pole) | 0.480Kg (1.058lb.) (3 pole) |
|---|---|---|---|---|



**Special Black Toggle Handle Motor Disconnect Switch**
EVA3100 + K/EVAB

**Dimensions** *(to convert to inches multiply by 0.03937)*

# Enclosed Motor Disconnect Switch

*These enclosed switches can be used locally at the motor.*

E185115


*







| **Catalog Number** | | | | | | | | |
|---|---|---|---|---|---|---|---|---|
| Black Handle | KEM325UL | | KEM340UL | | KEM360UL | | KEM380UL | |
| Yellow/ Red Handle | KEM325UL Y/R | | KEM340UL Y/R | | KEM360UL Y/R | | KEM380UL Y/R | |
| No. of Poles | 3 (4 pole - KEM425UL Y/R) | | 3 (4 pole - KEM440UL Y/R) | | 3 (4 pole - KEM460UL Y/R) | | 3 (4 pole - KEM480UL Y/R) | |
| General Purpose Current | 25A | | 40A | | 60A | | 80A | |
| Maximum Voltage | 600V AC | | 600V AC | | 600V AC | | 600V AC | |
| Motor FLA @ 480V AC | 17.5A | | 28A | | 34A | | – | |
| Motor FLA @ 600V AC | 11A | | 18A | | 27A | | 47A | |
| **Horsepower Rating /HP** | 1 Phase | 3 Phase | 1 Phase | 3 Phase | 1 Phase | 3 Phase | 1 Phase | 3 Phase |
| 110-120V AC | 1 | 2 | 2 | 3 | 3 | 5 | 3 | 7.5 |
| 200V AC | 2 | 5 | 3 | 7.5 | 5 | 10 | 7.5 | 10 |
| 208V AC | 2 | 5 | 3 | 7.5 | 5 | 10 | 7.5 | 15 |
| 220-240V AC | 3 | 7.5 | 5 | 10 | 5 | 10 | 7.5 | 15 |
| 265V AC | 3 | 7.5 | 5 | 10 | 5 | 10 | 10 | 20 |
| 277V AC | 3 | 7.5 | 5 | 10 | 7.5 | 10 | 10 | 20 |
| 380-415V AC | 5 | 10 | 7.5 | 15 | 10 | 20 | 15 | 25 |
| 440-480V AC | 7.5 | 15 | 10 | 20 | 15 | 25 | 20 | 30 |
| 550-600V AC | 5 | 10 | 7.5 | 15 | 15 | 25 | 25 | 40 |
| **Short Circuit Withstand Rating at 600 V with Max. Fuse Size/Class:** | 10kA | | 10kA | | 10kA | | 10kA | |
| K5 | 50A | | 50A | | 60A | | 150A | |
| RK5 | 50A | | 50A | | 60A (80A@480V AC) | | 150A | |
| RK1 | 80A | | 80A | | 100A | | — | |
| J | 80A | | 80A | | 100A | | 200A | |
| **Terminal Size Acceptability** (Cu Conductors only, 75°C) | 14-8AWG | | 14-8AWG | | 12-4AWG | | 4-1/0AWG | |
| **Terminal Torque** | 16 lb. in. | | 16 lb. in. | | 16 lb. in. | | 50 lb. in. | |
| **Environmental Rating** | NEMA Type 4X | | NEMA Type 4X | | NEMA Type 4X | | NEMA Type 4X | |
| **Enclosure Type Used** | U2 | | U3 | | U3 | | U3 | |

**Dimensions**

*(to convert to inches multiply by 0.03937)*

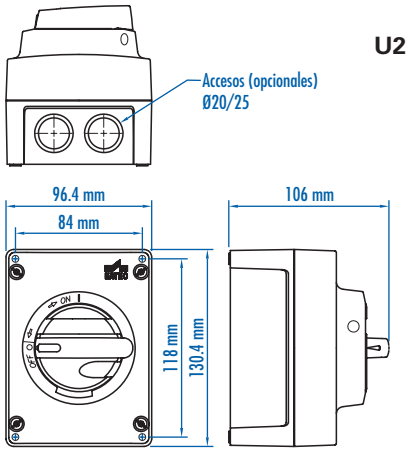


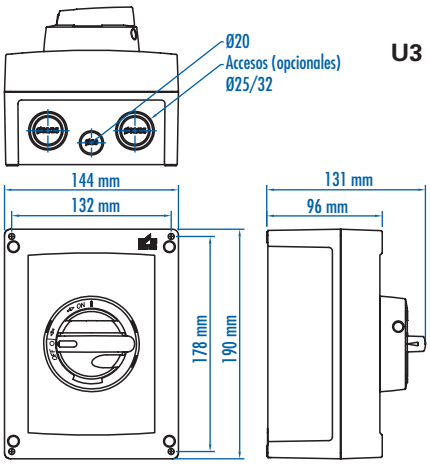


| | | | | |
|---|---|---|---|---|
| **Weight** | 0.49kg (1.08 lb.) | 0.72kg (1.587 lb.) | 0.773kg (1.698 lb.) | 1.021kg (2.249 lb.) |

## Suitable Accessories

| | | | | |
|---|---|---|---|---|
| **Auxiliary Contacts** | KU1.V, KU2.V | KU1.V, KU2.V | KU1.V, KU2.V | VKA1.V, VKA2.V |

*16A model also available, please contact Altech.

**Dimensions** *(to convert to inches multiply by 0.03937)*

# Enclosed Motor Disconnect Switch







## FUSED



| KEM3100L<br>KEM3100L Y/R | KEM3125L<br>KEM3125L Y/R | KEM3150L<br>KEM3150L Y/R | KKVM332, KKVM332CC<br>KKVM332 Y/R, KKVM332CC Y/R |
|---|---|---|---|
| 3 (4 pole - KEM4100L Y/R) | 3 (4 pole - KEM4125L Y/R) | 3 (4 pole - KEM4150L Y/R) | 3 |
| 100A | 125A | 150A | 30A |
| 600V AC | 600V AC | 600V AC | 600V AC |
| – | – | – | |
| 54A | 68A | 83A | |

| 1 Phase | 3 Phase | 1 Phase | 3 Phase | 1 Phase | 3 Phase |
|---|---|---|---|---|---|
| 3 | 7.5 | 5 | 10 | 7.5 | 10 |
| 7.5 | 15 | 10 | 20 | 10 | 25 |
| 7.5 | 15 | 10 | 20 | 10 | 25 |
| 10 | 20 | 15 | 25 | 15 | 30 |
| 10 | 20 | 15 | 25 | 20 | 30 |
| 10 | 20 | 15 | 30 | 20 | 30 |
| 15 | 30 | 20 | 40 | 25 | 50 |
| 20 | 40 | 30 | 50 | 30 | 60 |
| 30 | 50 | 30 | 60 | 40 | 75 |

| Cat. No. | Fuse Type |
|---|---|
| KKVM 332 (Y/R) | 10x38, Midget |
| KKVM 332CC (Y/R) | Class CC |

| 10kA | 10kA | 10kA | 10kA |
|---|---|---|---|
| 150A | 150A | 150A | 50A |
| 150A | 150A | 150A | 50A |
| – | – | – | 80A |
| 200A | 200A | 200A | 80A |
| 4-1/0AWG | 4-1/0AWG | 4-1/0AWG | 14-8AWG |
| 50 lb. in. | 50 lb. in. | 50 lb. in. | 16 lb. in. |
| NEMA Type 4X | NEMA Type 4X | NEMA Type 4X | NEMA Type 4X |
| MF10 | MF10 | MF11UL | U3 |

**MF10**

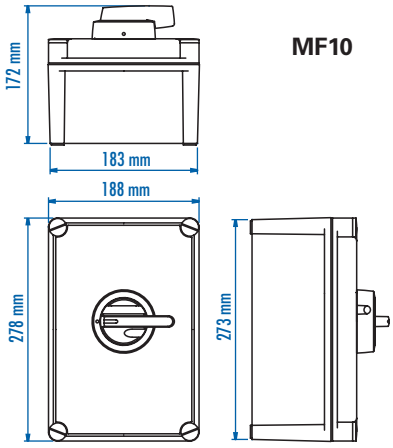


**MF11UL**

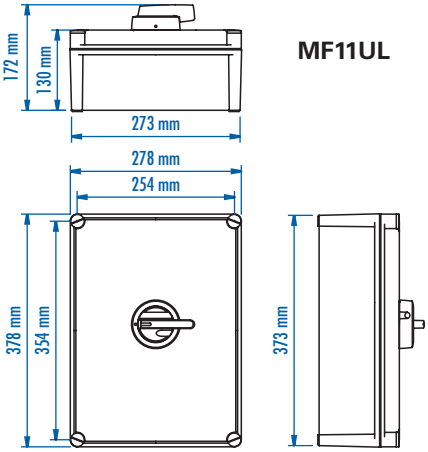


**U3**

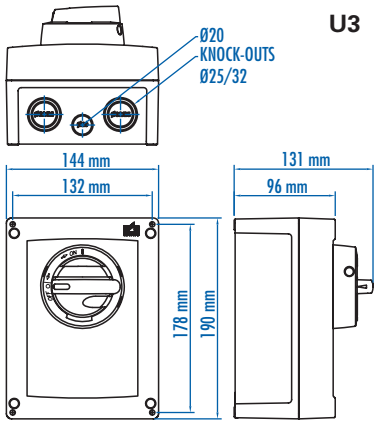


| 1.9051kg (4.2 lb.) | 1.9051kg (4.2 lb.) | 2.8351kg (6.25 lb.) | 0.998kg (2.2 lb.) |
|---|---|---|---|
| VKA1.V, VKA2.V | VKA1.V, VKA2.V | VKA1.V, VKA2.V | KU1.V, KU2.V |

**Dimensions** *(to convert to inches multiply by 0.03937)*

# Stainless Steel Enclosed Motor Disconnect Switch

E185115

*These enclosures are ideal where chemicals are used for cleaning and maintenance such as food processing plants and breweries. Mining is another application area. Their stainless steel construction is extremely resistant to corrosion, and the enclosure is also rated to IP66.*



*



| **Catalog Number** | | | | |
|---|---|---|---|---|
| Black Handle | KER325UL | | KER340UL | |
| Yellow/ Red Handle | KER325ULY/R | | KER340ULY/R | |
| No. of Poles | 3 (4 pole - KER425ULY/R) | | 3 (4 pole - KER440ULY/R) | |
| General Purpose Current | 25A | | 40A | |
| Maximum Voltage | 600V AC | | 600V AC | |
| Motor FLA @ 480V AC | 17.5A | | 28A | |
| Motor FLA @ 600V AC | 11A | | 18A | |
| **Horsepower Rating /HP** | 1 Phase | 3 Phase | 1 Phase | 3 Phase |
| 110-120V AC | 1 | 2 | 2 | 3 |
| 200V AC | 2 | 5 | 3 | 7.5 |
| 208V AC | 2 | 5 | 3 | 7.5 |
| 220-240V AC | 3 | 7.5 | 5 | 10 |
| 265V AC | 3 | 7.5 | 5 | 10 |
| 277V AC | 3 | 7.5 | 5 | 10 |
| 380-415V AC | 5 | 10 | 7.5 | 15 |
| 440-480V AC | 7.5 | 15 | 10 | 20 |
| 550-600V AC | 5 | 10 | 7.5 | 15 |
| **Short Circuit Withstand Rating at 600 V with Max. Fuse Size/Class:** | 10kA | | 10kA | |
| K5 | 50A | | 50A | |
| RK5 | 50A | | 50A | |
| RK1 | 80A | | 80A | |
| J | 80A | | 80A | |
| **Terminal Size Acceptability** (Cu Conductors only, 75°C) | 14-8AWG | | 14-8AWG | |
| **Terminal Torque** | 16 lb. in. | | 16 lb. in. | |
| **Environmental Rating** | NEMA Type 4X | | NEMA Type 4X | |
| **Enclosure Type Used** | H23 | | H23 | |

**Dimensions**

*(to convert to inches multiply by 0.03937)*

**H23**

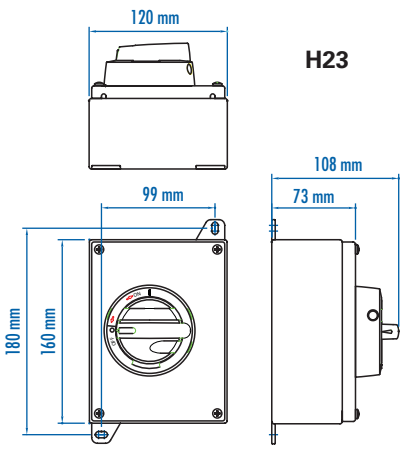


| | | |
|---|---|---|
| **Weight** | 1.35kg (2.98 lb.) | 1.35kg (2.98 lb.) |

**Suitable Accessories**

| | | |
|---|---|---|
| **Auxiliary Contacts** | KU1.V, KU2.V | KU1.V, KU2.V |

* 16A model also available, please contact Altech.

**Dimensions** *(to convert to inches multiply by 0.03937)*

# Stainless Steel Enclosed Motor Disconnect Switch

E185115






| KER360UL<br>KER360ULY/R | KER380UL<br>KER380ULY/R | KER3100UL<br>KER3100ULY/R | KER3125UL<br>KER3125ULY/R |
|---|---|---|---|
| 3 (4 pole - KER460ULY/R) | 3 (4 pole - KER480ULY/R) | 3 (4 pole - KER4100ULY/R) | 3 (4 pole - KER4125ULY/R) |
| 60A | 80A | 100A | 125A |
| 600V AC | 600V AC | 600V AC | 600V AC |
| 34A | – | – | – |
| 27A | 47A | 54A | 68A |

| 1 Phase | 3 Phase | 1 Phase | 3 Phase | 1 Phase | 3 Phase | 1 Phase | 3 Phase |
|---|---|---|---|---|---|---|---|
| 3 | 5 | 3 | 7.5 | 3 | 7.5 | 5 | 10 |
| 5 | 10 | 7.5 | 10 | 7.5 | 15 | 10 | 20 |
| 5 | 10 | 7.5 | 15 | 7.5 | 15 | 10 | 20 |
| 5 | 10 | 7.5 | 15 | 10 | 20 | 15 | 25 |
| 5 | 10 | 10 | 20 | 10 | 20 | 15 | 25 |
| 7.5 | 10 | 10 | 20 | 10 | 20 | 15 | 30 |
| 10 | 20 | 15 | 25 | 15 | 30 | 20 | 40 |
| 15 | 25 | 20 | 30 | 20 | 40 | 30 | 50 |
| 15 | 25 | 25 | 40 | 30 | 50 | 30 | 60 |

| | | | |
|---|---|---|---|
| 10kA | 10kA | 10kA | 10kA |
| 60A | 150A | 150A | 150A |
| 60A (80A@480V AC) | 150A | 150A | 150A |
| 100A | — | – | – |
| 100A | 200A | 200A | 200A |
| 12-4AWG | 4-1/0AWG | 4-1/0AWG | 4-1/0AWG |
| 16 lb. in. | 50 lb. in. | 50 lb. in. | 50 lb. in. |
| NEMA Type 4X | NEMA Type 4X | NEMA Type 4X | NEMA Type 4X |
| H32 | H32 | H32 | H32 |

**H32**

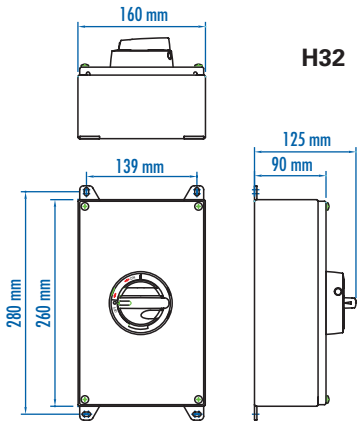


| | | | |
|---|---|---|---|
| 2.66kg (5.87 lb.) | 2.66kg (5.87 lb.) | 2.66kg (5.87 lb.) | 2.66kg (5.87 lb.) |
| KU1.V, KU2.V | VKA1.V, VKA2.V | VKA1.V, VKA2.V | VKA1.V, VKA2.V |

**Dimensions** *(to convert to inches multiply by 0.03937)*