BF23000E400

THREE-POLE CONTACTOR, IEC OPERATING CURRENT IE (AC3) = 230A, AC/DC COIL, 250… 500VAC/DC



Product designation			Power contactor
Product type designation			BF230
Contact characteristics			
Number of poles		Nr.	3
Rated insulation voltage Ui IEC/EN		V	1000
Rated impulse withstand voltage Uimp		kV	8
Operational frequency			
	min	Hz	25
	max	Hz	400
IEC Conventional free air thermal current Ith		A	350
Operational current Ie			
	AC-1 (≤40°C)	A	350
	AC-1 (≤55°C)	A	290
	AC-1 (≤70°C)	A	250
	AC-3 (≤440V ≤55°C)	A	230
	AC-4 (400V)	A	110
Rated operational power AC-3 (T≤55°C)			
	230V	kW	55
	400V	kW	110
	415V	kW	110
	440V	kW	132
	500V	kW	132
	690V	kW	160
	1000V	kW	110
Rated operational power AC-1 (T≤40°C)			
	230V	kW	132
	400V	kW	230
	500V	kW	253
	690V	kW	397
IEC max current Ie in DC1 with L/R ≤ 1ms with 1 poles in series			
	≤24V	A	350
	48V	A	350
	75V	A	350
	110V	A	145
	220V	A	–
IEC max current Ie in DC1 with L/R ≤ 1ms with 2 poles in series			
	≤24V	A	350
	48V	A	350
	75V	A	350
	110V	A	270
	220V	A	225
IEC max current Ie in DC1 with L/R ≤ 1ms with 3 poles in series			
	≤24V	A	350
	48V	A	350
	75V	A	350

The characteristics described in this document are subject to updates or modifications at any time. The descriptions, technical and functional information, illustrations and instructions in this brochure are purely illustrative, and are consequently not contractually binding

	110V	A	270
	220V	A	270
	330V	A	225
IEC max current Ie in DC1 with L/R ≤ 1ms with 4 poles in series			
	≤24V	A	350
	48V	A	350
	75V	A	350
	110V	A	350
	220V	A	350
IEC max current Ie in DC3-DC5 with L/R ≤ 15ms with 1 poles in series			
	≤24V	A	350
	48V	A	350
	75V	A	250
	110V	A	135
	220V	A	–
IEC max current Ie in DC3-DC5 with L/R ≤ 15ms with 2 poles in series			
	≤24V	A	350
	48V	A	350
	75V	A	250
	110V	A	225
	220V	A	180
IEC max current Ie in DC3-DC5 with L/R ≤ 15ms with 3 poles in series			
	≤24V	A	350
	48V	A	350
	75V	A	250
	110V	A	250
	220V	A	225
	330V	A	180
IEC max current Ie in DC3-DC5 with L/R ≤ 15ms with 4 poles in series			
	≤24V	A	350
	48V	A	350
	75V	A	250
	110V	A	250
	220V	A	225
	330V	A	210
	460V	A	180
Short-time allowable current for 10s (IEC/EN60947-1)		A	1840
Protection fuse			
	gG (IEC)	A	400
	aM (IEC)	A	250
Making capacity (RMS value)		A	2300
Breaking capacity at voltage			
	440V	A	1840
	500V	A	1472
	690V	A	1296
Resistance per pole (average value)		mΩ	0.18
Power dissipation per pole (average value)			
	Ith	W	21
	AC3	W	9.3
Tightening torque for terminals			
	min	Nm	18
	max	Nm	18
	min	lbin	159
	max	lbin	159

The characteristics described in this document are subject to updates or modifications at any time. The descriptions, technical and functional information, illustrations and instructions in this brochure are purely illustrative, and are consequently not contractually binding

Tightening torque for coil terminal				
		min	Nm	0.8
		max	Nm	1
Power terminal protection according to IEC/EN 60529				IP00
Mechanical features				
Operating position				
		normal		Vertical plan
		allowable		±30°
Fixing				Screw
Weight			g	3000
Operations				
Mechanical life			cycles	10000000
Electrical life			cycles	1000000
Safety related data				
Performance level B10d according to EN/ISO 13489-1				
		rated load	cycles	1000000
EMC compatibility				yes
AC coil operating				
Rated AC voltage at 50/60Hz, 60Hz				
		min	V	250
		max	V	500
AC operating voltage				
	of 50/60Hz coil powered at 50Hz			
	pick-up			
		min	%Us	80 Us min
		max	%Us	110 Us max
	drop-out			
		max	%Us	≤70 Us min
	of 50/60Hz coil powered at 60Hz			
	pick-up			
		min	%Us	80 Us min
		max	%Us	110 Us max
	drop-out			
		max	%Us	≤70 Us min
AC average coil consumption at 20°C				
	of 50/60Hz coil powered at 50Hz			
		in-rush	VA	160…230
		holding	VA	1.5...3.0
	of 50/60Hz coil powered at 60Hz			
		in-rush	VA	160…230
		holding	VA	1.5...3.0
	of 60Hz coil powered at 60Hz			
		in-rush	VA	160…230
		holding	VA	1.5...3.0
Dissipation at holding ≤20°C 50Hz			W	1.5...3.0
DC coil operating				
DC rated control voltage				
		min	V	250
		max	V	500
DC operating voltage				
	pick-up			
		min	%Us	85 Us min
		max	%Us	110 Us max

The characteristics described in this document are subject to updates or modifications at any time. The descriptions, technical and functional information, illustrations and instructions in this brochure are purely illustrative, and are consequently not contractually binding

	drop-out				
			max	%Us	≤70 Us min
Average coil consumption ≤20°C					
			in-rush	W	160…230
			holding	W	1.5...3.0
Max cycles frequency					
Mechanical operation				cycles/h	1000
Operating times					
Average time for Us control					
	in AC				
		Closing NO			
			min	ms	50
			max	ms	100
		Opening NO			
			min	ms	30
			max	ms	75
UL technical data					
Yielded mechanical performance					
	for three-phase AC motor				
			200/208V	HP	75
			220/230V	HP	75
			460/480V	HP	150
			575/600V	HP	200
General USE					
	Contactor				
			AC current	A	350
Short-circuit protection fuse, 600V					
	High fault				
			Short circuit current	kA	100
			Fuse rating	A	400
			Fuse class		J
	Standard fault				
			Short circuit current	kA	10
			Fuse rating	A	400
			Fuse class		RK5
Ambient conditions					
Temperature					
	Operating temperature				
			min	°C	-40
			max	°C	70
	Storage temperature				
			min	°C	-50
			max	°C	80
Max altitude				m	3000
Resistance & Protection					
Pollution degree					3
Dimensions					

The characteristics described in this document are subject to updates or modifications at any time. The descriptions, technical and functional information, illustrations and instructions in this brochure are purely illustrative, and are consequently not contractually binding

BF23000E400

THREE-POLE CONTACTOR, IEC OPERATING CURRENT IE (AC3) = 230A, AC/DC COIL, 250… 500VAC/DC

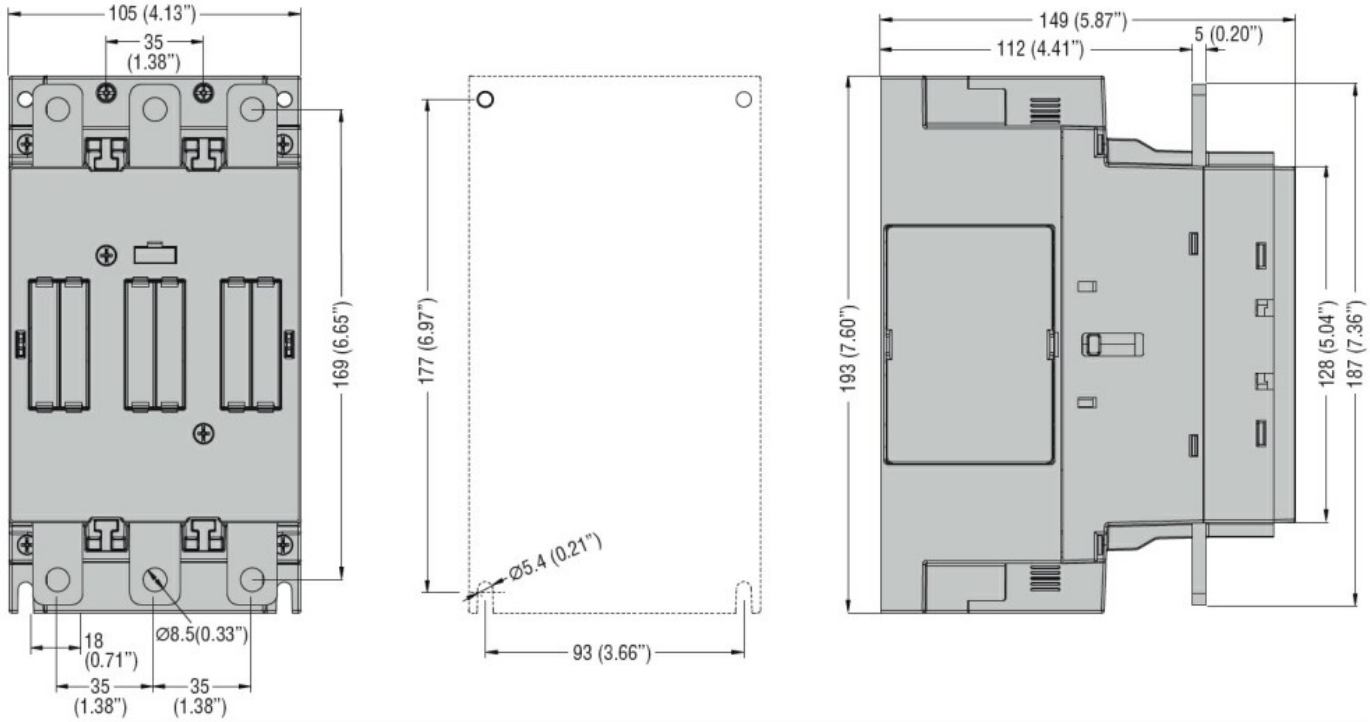

Wiring diagrams

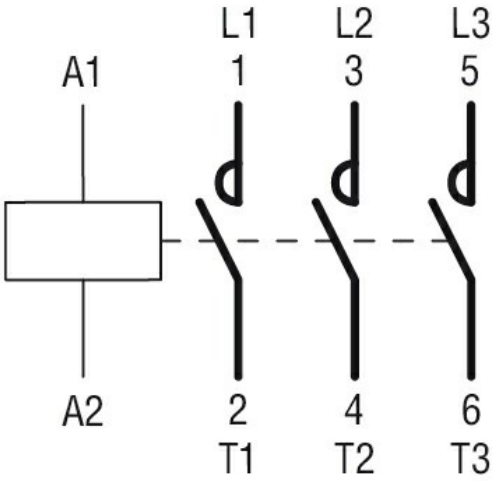

Certifications and compliance

Compliance

	CSA C22.2 n° 60947-1
	CSA C22.2 n° 60947-4-1
	IEC/EN/BS 60947-1
	IEC/EN/BS 60947-4-1
	UL 60947-1
	UL 60947-4-1

Certificates

	cULus

ETIM classification

ETIM 8.0	EC000066 - Power contactor, AC switching

The characteristics described in this document are subject to updates or modifications at any time. The descriptions, technical and functional information, illustrations and instructions in this brochure are purely illustrative, and are consequently not contractually binding