DATASHEET - NZMB2-A200-NA



Similar to illustration

Circuit-breaker, 3p, 200A

Part no. NZMB2-A200-NA
Catalog No. 269216

Delivery program

Product range			Circuit-breaker
Protective function			System and cable protection
Standard/Approval			UL/CSA, IEC
Release system			Thermomagnetic release
Installation type			Fixed
Description			Switches conform to UL/CSA as well as the IEC regulations. IEC switching performance values are contained on the rating plate. Adjustable overload releases Ir
Frame size			NZM2
Number of poles			3 pole
Standard equipment			Screw connection
Switching capacity			
SCCR 480Y/277 V 60 Hz	I_{cu}	kA	25
SCCR 480 V 60 Hz	I_{cu}	kA	25
SCCR 600Y/347 V 60 Hz	I_{cu}	kA	18
Rated current = rated uninterrupted current			
Rated current = rated uninterrupted current	$I_n = I_u$	A	200
Setting range			
Overload trip			
	I_r	A	160 - 200
Short-circuit releases 			
Non-delayed 	$I_i = I_n$ x …		6 - 10

Technical data

General

Standards			IEC/EN 60947
Protection against direct contact			Finger and back of hand proof to VDE 0106 Part 100
Climatic proofing			Damp heat, constant, to IEC 60068-2-78 Damp heat, cyclic, to IEC 60068-2-30
Ambient temperature			
Ambient temperature, storage		°C	- 40 - + 70
Operation		°C	-25 - +70
Mechanical shock resistance (10 ms half-sinusoidal shock) according to IEC 60068-2-27		g	20 (half-sinusoidal shock 20 ms)
Safe isolation to EN 61140			
Between auxiliary contacts and main contacts		V AC	500
between the auxiliary contacts		V AC	300
Weight		kg	2.345
Mounting position			
Mounting position			Vertical and 90° in all directions

			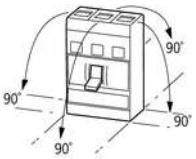 With XFI earth-fault release: - NZM1, N1, NZM2, N2: vertical and 90° in all directions with plug-in unit - NZM1, N1, NZM2, N2: vertical, 90° right/left with withdrawable unit: - NZM3, N3: vertical, 90° right/left - NZM4, N4: vertical with remote operator: - NZM2, N(S)2, NZM3, N(S)3, NZM4, N(S)4: vertical and 90° in all directions
Direction of incoming supply			as required
Degree of protection			
Device			In the operating controls area: IP20 (basic degree of protection)
Enclosures			With insulating surround: IP40 With door coupling rotary handle: IP66
Terminations			Tunnel terminal: IP10 Phase isolator and strip terminal: IP00
Other technical data (sheet catalogue)			Weight Temperature dependency, Derating Effective power loss

Circuit-breakers

Rated surge voltage invariability	U_{imp}		
Main contacts		V	8000
Auxiliary contacts		V	6000
Rated operational voltage	U_e	V AC	440
Overvoltage category/pollution degree			III/3
Rated insulation voltage	U_i	V	690
Use in unearthed supply systems		V	≦ 440

Switching capacity

Rated short-circuit making capacity	I_{cm}		
240 V	I_{cm}	kA	63
400/415 V	I_{cm}	kA	53
440 V 50/60 Hz	I_{cm}	kA	53
Rated short-circuit breaking capacity I_{cn}	I_{cn}		
Icu to IEC/EN 60947 test cycle O-t-CO	Icu	kA	
240 V 50/60 Hz	I_{cu}	kA	30
400/415 V 50/60 Hz	I_{cu}	kA	25
440 V 50/60 Hz	I_{cu}	kA	25
Ics to IEC/EN 60947 test cycle O-t-CO-t-CO	Ics	kA	
240 V 50/60 Hz	I_{cs}	kA	30
400/415 V 50/60 Hz	I_{cs}	kA	25
440 V 50/60 Hz	I_{cs}	kA	18.5
Maximum low-voltage h.b.c. fuse		A gG/gL	355
			Maximum back-up fuse, if the expected short-circuit currents at the installation location exceed the switching capacity of the circuit-breaker.
Technical data that diverge from products for the IEC market Switching capacity of NA switches (UL489, CSA 22.2 No. 5.1) Short-circuit current rating SCCR			
SCCR 240 V 60 Hz	I_{cu}	kA	35
SCCR 480Y/277 V 60 Hz	I_{cu}	kA	25
SCCR 480 V 60 Hz	I_{cu}	kA	25
SCCR 600Y/347 V 60 Hz	I_{cu}	kA	18
Utilization category to IEC/EN 60947-2			A
Lifespan, mechanical(of which max. 50 % trip by shunt/undervoltage release)	Operations		20000
Lifespan, electrical			
AC-1			
400 V 50/60 Hz	Operations		7500
AC--3			
415 V 50/60 Hz	Operations		6500

Max. operating frequency		Ops/h	120
Total break time at short-circuit		ms	< 10

Terminal capacity

Standard equipment			Screw connection
Round copper conductor			
Box terminal			
Solid		mm^2	1 x (12 … 6)
Stranded		mm^2	1 x (4 … 350)
Tunnel terminal			
Solid		mm^2	1 x 16
Stranded			
Stranded		mm^2	1 x (4 … 350)
Bolt terminal and rear-side connection			
Direct on the switch			
Solid		mm^2	1 x (11 … 6)
Stranded		mm^2	1 x (4 … 3/0)
Al conductors, Cu cable			
Tunnel terminal			
Solid		mm^2	1 x 16
Bolt terminal and rear-side connection			
Flat copper strip, with holes	min.	mm	2 x 16 x 0.8
Flat copper strip, with holes	max.	mm	10 x 16 x 0.8
Cu strip (number of segments x width x segment thickness)			
Box terminal			
	min.	mm	2 x 9 x 0.8
	max.	mm	10 x 16 x 0.8
Bolt terminal and rear-side connection			
Flat copper strip, with holes	min.	mm	2 x 16 x 0.8
Flat copper strip, with holes	max.	mm	10 x 16 x 0.8
Copper busbar (width x thickness)	mm		
Bolt terminal and rear-side connection			
Screw connection			M8
Direct on the switch			
	min.	mm	16 x 5
	max.	mm	20 x 5
Control cables			
		mm^2	1 x (18 … 14) 2 x (18 … 16)

Design verification as per IEC/EN 61439

Technical data for design verification			
Rated operational current for specified heat dissipation	I_n	A	200
Equipment heat dissipation, current-dependent	P_{vid}	W	48
Operating ambient temperature min.		°C	-25
Operating ambient temperature max.		°C	70
IEC/EN 61439 design verification			
10.2 Strength of materials and parts			
10.2.2 Corrosion resistance			Meets the product standard's requirements.
10.2.3.1 Verification of thermal stability of enclosures			Meets the product standard's requirements.
10.2.3.2 Verification of resistance of insulating materials to normal heat			Meets the product standard's requirements.
10.2.3.3 Verification of resistance of insulating materials to abnormal heat and fire due to internal electric effects			Meets the product standard's requirements.
10.2.4 Resistance to ultra-violet (UV) radiation			Meets the product standard's requirements.
10.2.5 Lifting			Does not apply, since the entire switchgear needs to be evaluated.
10.2.6 Mechanical impact			Does not apply, since the entire switchgear needs to be evaluated.

10.2.7 Inscriptions		Meets the product standard's requirements.
10.3 Degree of protection of ASSEMBLIES		Does not apply, since the entire switchgear needs to be evaluated.
10.4 Clearances and creepage distances		Meets the product standard's requirements.
10.5 Protection against electric shock		Does not apply, since the entire switchgear needs to be evaluated.
10.6 Incorporation of switching devices and components		Does not apply, since the entire switchgear needs to be evaluated.
10.7 Internal electrical circuits and connections		Is the panel builder's responsibility.
10.8 Connections for external conductors		Is the panel builder's responsibility.
10.9 Insulation properties		
10.9.2 Power-frequency electric strength		Is the panel builder's responsibility.
10.9.3 Impulse withstand voltage		Is the panel builder's responsibility.
10.9.4 Testing of enclosures made of insulating material		Is the panel builder's responsibility.
10.10 Temperature rise		The panel builder is responsible for the temperature rise calculation. Eaton will provide heat dissipation data for the devices.
10.11 Short-circuit rating		Is the panel builder's responsibility. The specifications for the switchgear must be observed.
10.12 Electromagnetic compatibility		Is the panel builder's responsibility. The specifications for the switchgear must be observed.
10.13 Mechanical function		The device meets the requirements, provided the information in the instruction leaflet (IL) is observed.

Technical data ETIM 7.0

Low-voltage industrial components (EG000017) / Power circuit-breaker for trafo/generator/installation protection (EC000228)		
Electric engineering, automation, process control engineering / Low-voltage switch technology / Circuit breaker (LV < 1 kV) / Circuit breaker for power transformer, generator and system protection (ecl@ss10.0.1-27-37-04-09 [AJZ716013])		
Rated permanent current Iu	A	200
Rated voltage	V	440 - 440
Rated short-circuit breaking capacity Icu at 400 V, 50 Hz	kA	25
Overload release current setting	A	160 - 200
Adjustment range short-term delayed short-circuit release	A	0 - 0
Adjustment range undelayed short-circuit release	A	1200 - 2000
Integrated earth fault protection		No
Type of electrical connection of main circuit		Screw connection
Device construction		Built-in device fixed built-in technique
Suitable for DIN rail (top hat rail) mounting		No
DIN rail (top hat rail) mounting optional		Yes
Number of auxiliary contacts as normally closed contact		0
Number of auxiliary contacts as normally open contact		0
Number of auxiliary contacts as change-over contact		0
With switched-off indicator		No
With under voltage release		No
Number of poles		3
Position of connection for main current circuit		Front side
Type of control element		Rocker lever
Complete device with protection unit		Yes
Motor drive integrated		No
Motor drive optional		Yes
Degree of protection (IP)		IP20

Approvals

Product Standards	UL 489; CSA-C22.2 No. 5-09; IEC 60947-2; CE marking
UL File No.	E31593
UL Category Control No.	DIVQ
CSA File No.	022086
CSA Class No.	1432-01
North America Certification	UL listed, CSA certified
Specially designed for North America	Yes
Suitable for	Feeder circuits, branch circuits

Current Limiting Circuit-Breaker		Yes
Max. Voltage Rating		600Y/347 V, 480 V
Degree of Protection		IEC: IP20; UL/CSA Type: -

Characteristics

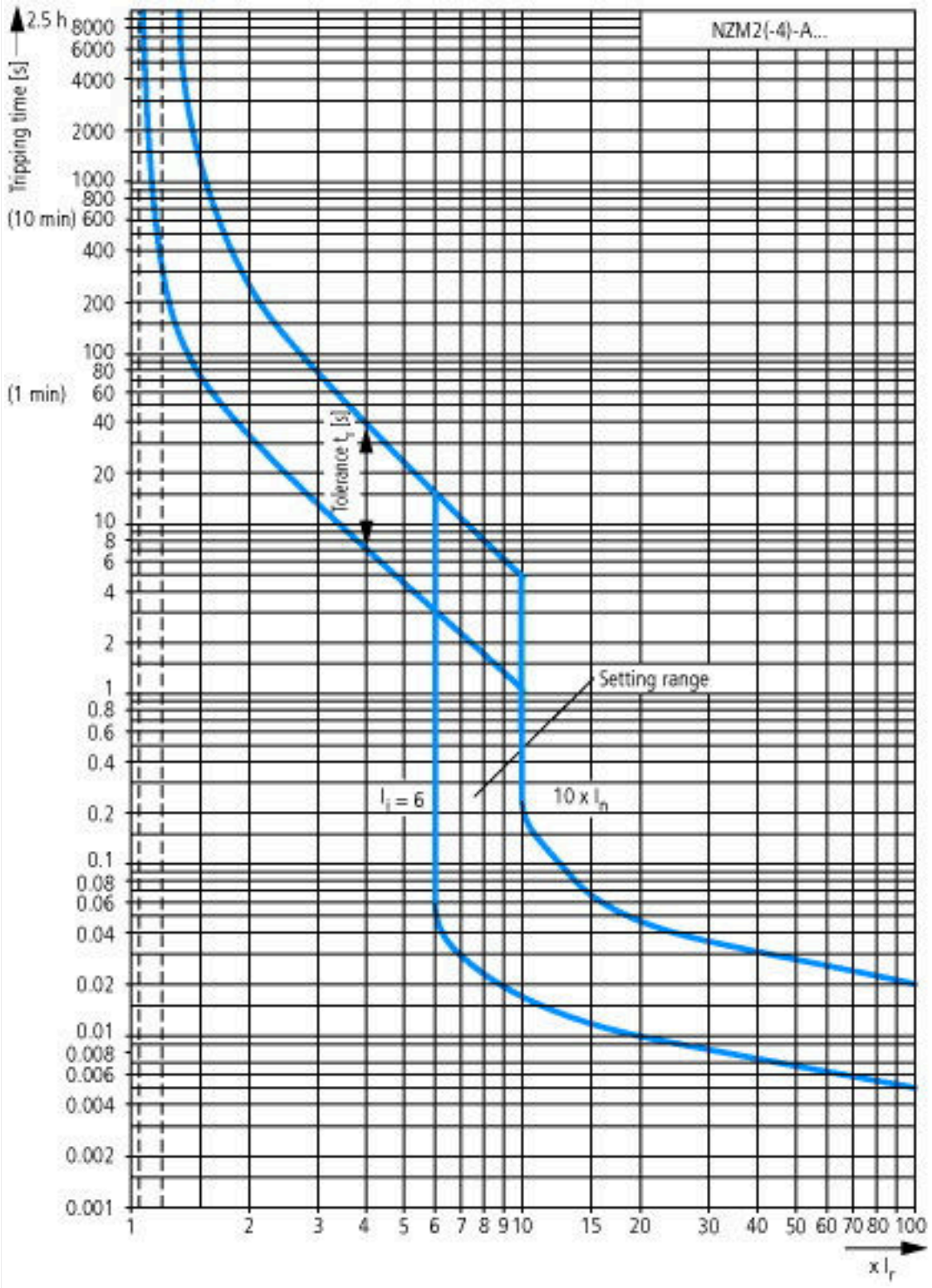

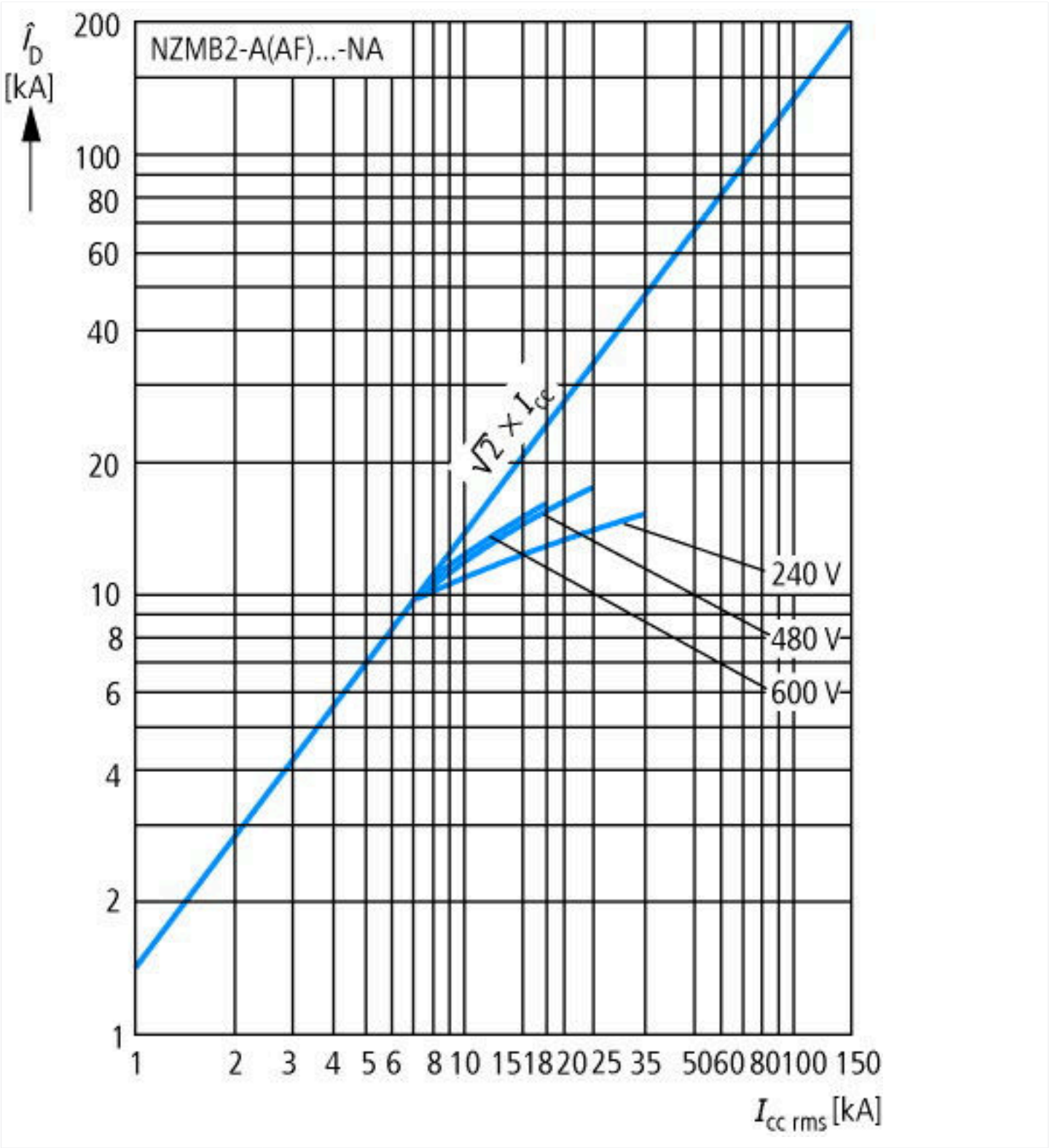
NZMB2-A(AF)...-NA
$\hat{I}_D$ [kA]
200
100
80
60
40
20
10
8
6
4
2
1
$\sqrt{2} \times I_{cc}$
240 V
480 V
600 V
1
2
3
4
5
6
8
10
15
18
20
25
35
50
60
80
100
150
$I_{cc\ rms}$ [kA]

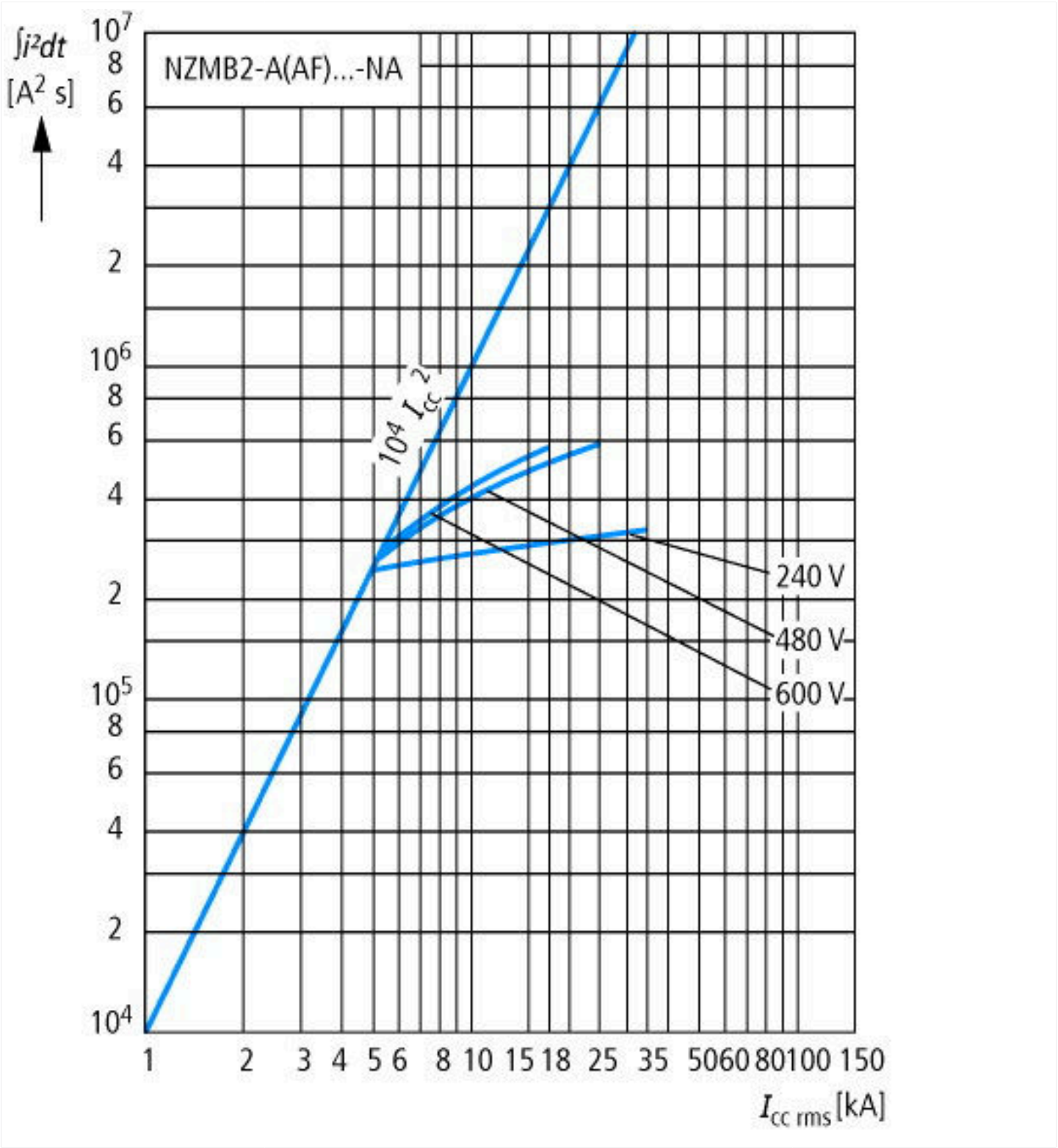
∫i²dt
[A² s]
NZMB2-A(AF)...-NA
10⁷
8
6
4
2
10⁶
8
6
4
2
10⁵
8
6
4
2
10⁴
10⁴ I_cc ²
240 V
480 V
600 V
1
2
3
4
5
6
8
10
15
18
25
35
50
60
80
100
150
I_cc rms [kA]

Dimensions

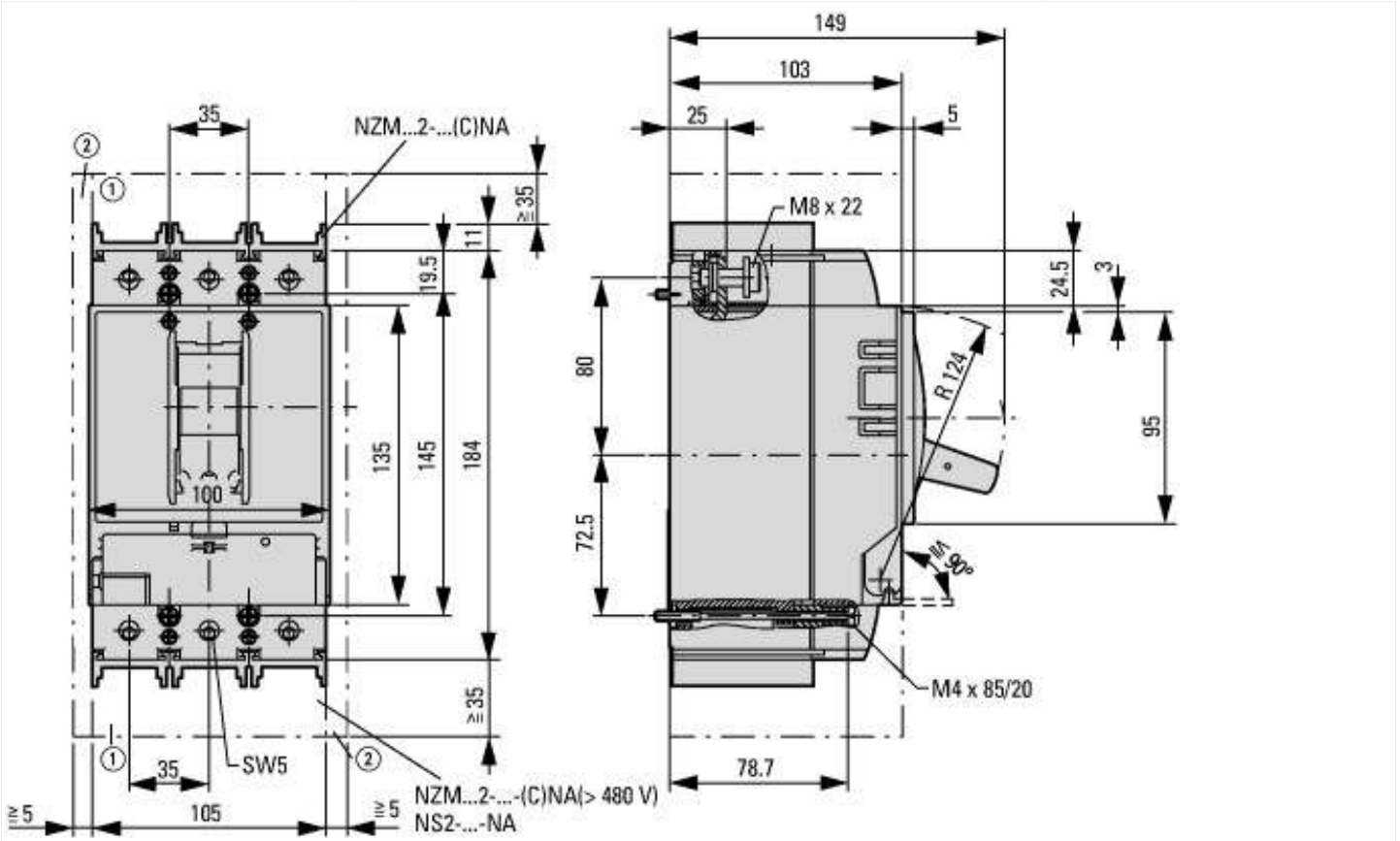

① Blow out area, minimum clearance to adjacent parts
② Minimum clearance to adjacent parts

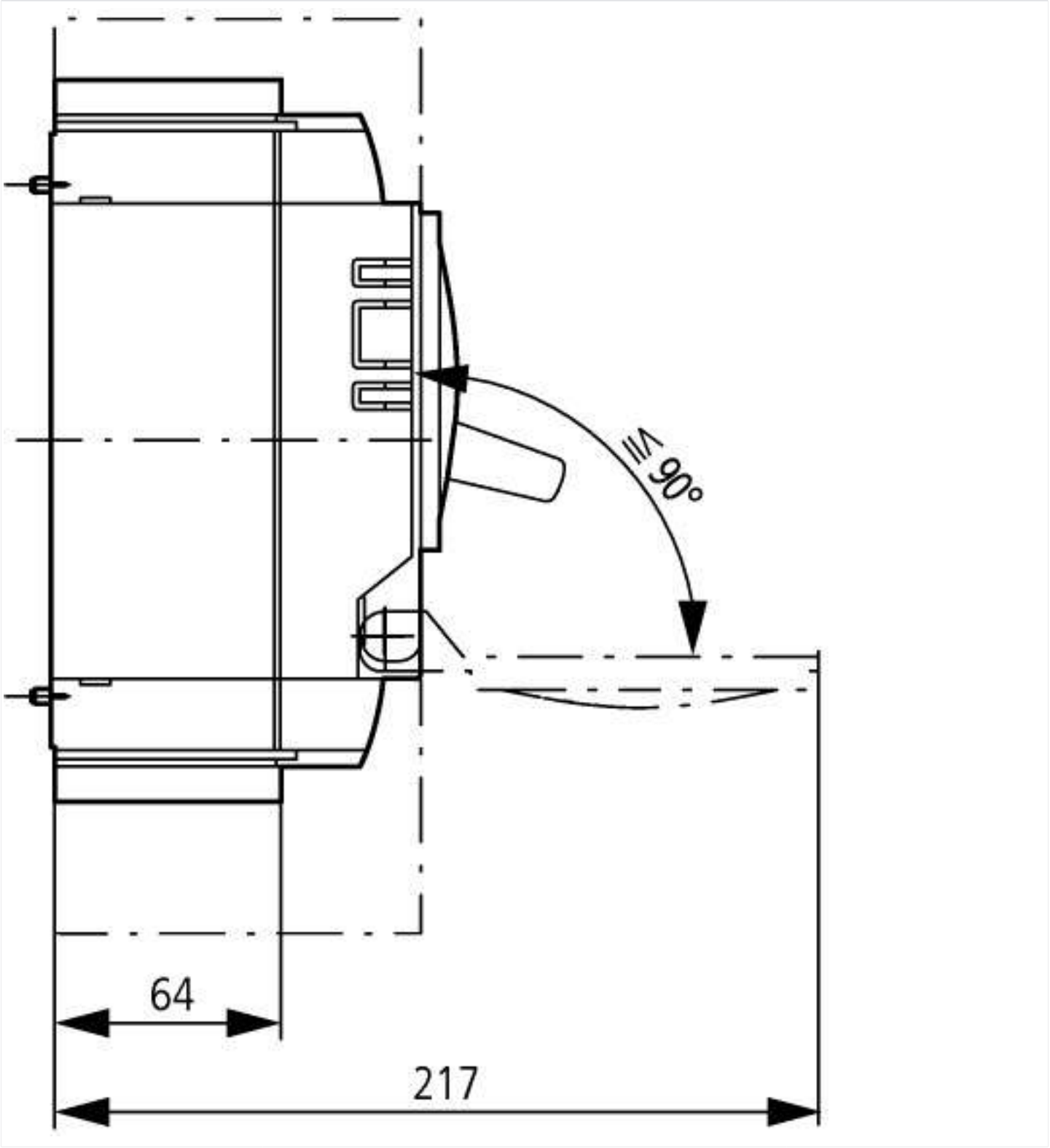

Additional product information (links)

IL01206006Z (AWA1230-1916) Circuit-Breaker, basic unit	
IL01206006Z (AWA1230-1916) Circuit-Breaker, basic unit	https://es-assets.eaton.com/DOCUMENTATION/AWA_INSTRUCTIONS/IL01206006Z2015_11.pdf
Weight	http://ecat.moeller.net/flip-cat/?edition=HPLEN&startpage=17.171
Temperature dependency, Derating	http://ecat.moeller.net/flip-cat/?edition=HPLEN&startpage=17.172
Effective power loss	http://ecat.moeller.net/flip-cat/?edition=HPLEN&startpage=17.174
additional technical information for NZM power switch	https://es-assets.eaton.com/DOCUMENTATION/PDF/nzm_technic_de_en.pdf

© 04/2021 by Eaton Industries GmbH