sferaco
VALVES & FITTINGS

REF. 644

ANGLE BRASS BALL VALVE FOR METER A.C.S.





Size :	DN 1/2" to 1"
Ends :	Free nut BSP, male or female
Min Temperature :	- 10°C
Max Temperature :	+ 120°C
Max Pressure :	20 Bars
Specifications :	Before or after water meter PTFE packing With free nut
Materials :	Brass

Sferaco 90 rue du Ruisseau 38297 St Quentin Fallavier Tel: + 33 (0) 474.94.15.90 Fax: + 33 (0) 474.95.62.08 Internet: www.sferaco.fr E-mail : sferaco@sferaco.fr

Information provided as an indication and subject to possible modification

sferaco
VALVES & FITTINGS

REF. 644

ANGLE BRASS BALL VALVE FOR METER A.C.S.

SPECIFIATIONS :

- Before or after water meter
- PTFE packing
- Solid ball
- With free nut
- Plumbing hole on free nut
- Butterfly brass handle 2/3-1/3 reversible
- Fabrication according to NF079 for DN 3/4"-1/2" and 3/4"-3/4"
- Made in Italy
- PTFE packing + O ring EPDM for DN 3/4"-1/2" and 3/4"-3/4"
- 10 years manufacture warranty (the installation defects and wear defects are not covered by the guarantee) for DN 3/4"-1/2" and 3/4"-3/4"
- Theoretical Kvs : 30 (m3/h)

USE :

- Water distribution
- Min Temperature Ts : - 10°C
- Max Temperature Ts : + 120°C
- Max Pressure Ps : 20 bars

PRESSURE / TEMPERATURE GRAPH (STEAM EXCLUDED) :

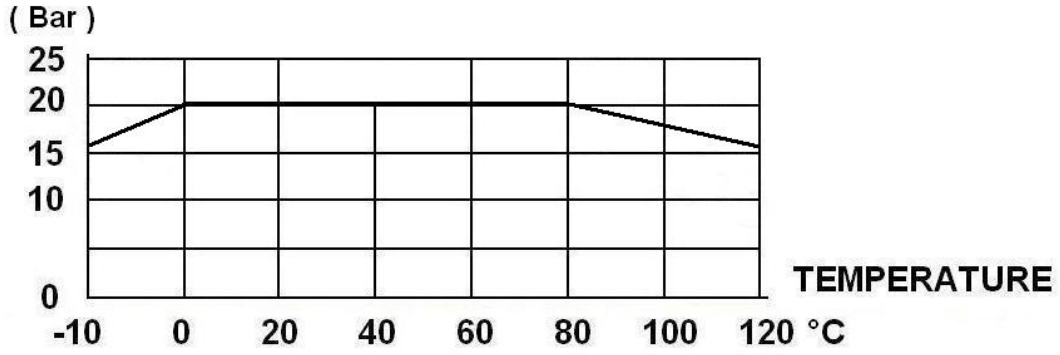

RANGE :



- Valve with free nut / Male BSP angle valve with green brass handle 2/3-1/3 NF **Ref. 644** DN 3/4"-1/2" and 3/4"-3/4"



- Valve with free nut / Male BSP angle valve with brass handle 2/3-1/3 **Ref. 644** DN 3/4" - 1"



- Locking device SFERALOCKING (without valve) **Ref. 9810404** (only for DN1/2" and 3/4")
- Passkey for locking device SFERALOCKING **Ref. 9810403**

Sferaco 90 rue du Ruisseau 38297 St Quentin Fallavier Tel: + 33 (0) 474.94.15.90 Fax: + 33 (0) 474.95.62.08 Internet: www.sferaco.fr E-mail : sferaco@sferaco.fr

Information provided as an indication and subject to possible modification

ANGLE BRASS BALL VALVE FOR METER A.C.S.

MATERIALS FREE NUT / MALE WITH GREEN BRASS BUTTERFLY HANDLE ANGLE VALVE NF DN 3/4"-1/2" and 3/4"-3/4" REF. 644 :

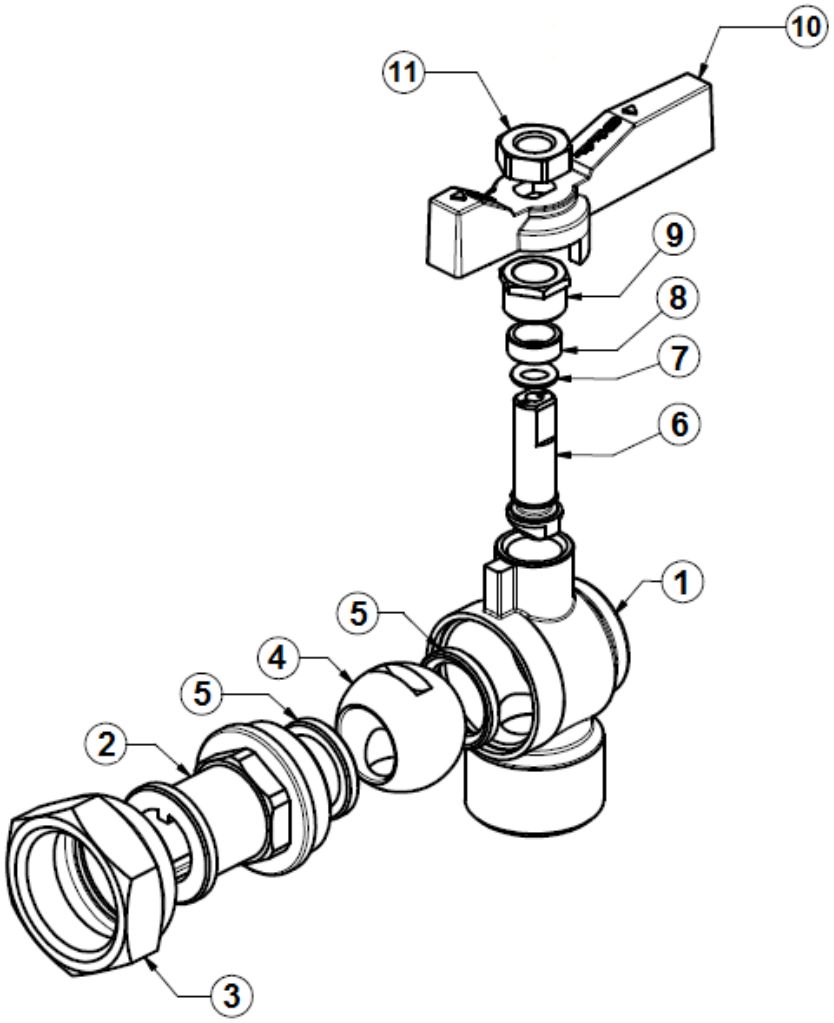

Item	Designation	Materials Ref. 644 DN 3/4"-1/2" and 3/4"-3/4" NF
1	Body	Brass CW 617 N according to 12165
2	Nipple	Brass CW 617 N according to 12165
3	Free nut	Brass CW 617 N according to 12165
4	Ball	Brass CW 617 N according to 12165 chormed
5	Seat	PTFE
6	Stem	Brass CW 614 N according to 12164
7	O ring	EPDM
8	Packing	PTFE
9	Packing nut	Brass CW 614 N according to 12164
10	Handle	Brass UNI EN 1982 with epoxy green painting RAL6029
11	Handle nut	Galvanized steel UNI 5739 Geomet 321 coated

ANGLE BRASS BALL VALVE FOR METER A.C.S.

MATERIALS FREE NUT / MALE WITH BRASS HANDLE ANGLE VALVE TYPE REF. 644 :

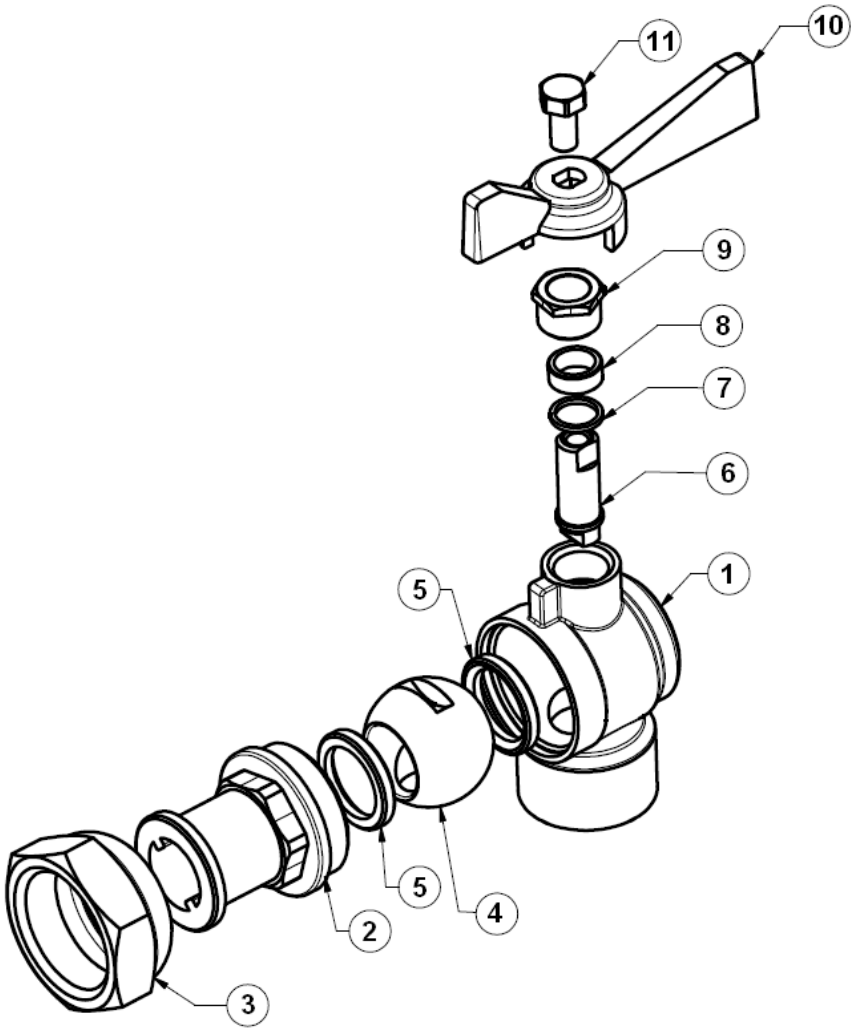

Item	Designation	Materials Ref. 644
1	Body	Brass CW 617 N according to 12165
2	Nipple	Brass CW 617 N according to 12165
3	Free nut	Brass CW 614 N according to 12164
4	Ball	Brass CW 617 N according to 12165 chromed
5	Seat	PTFE
6	Stem	Brass CW 614 N according to 12164
7	Ring	Brass CW 614 N according to 12164
8	Packing	PTFE
9	Packing nut	Brass CW 614 N according to 12164
10	Handle	Brass UNI EN 1982
11	Handle screw	Brass

ANGLE BRASS BALL VALVE FOR METER A.C.S.

SIZE FREE NUT / MALE WITH GREEN BRASS HANDLE NF TYPE REF.644 DN 3/4-1/2 AND 3/4-3/4 (mm):

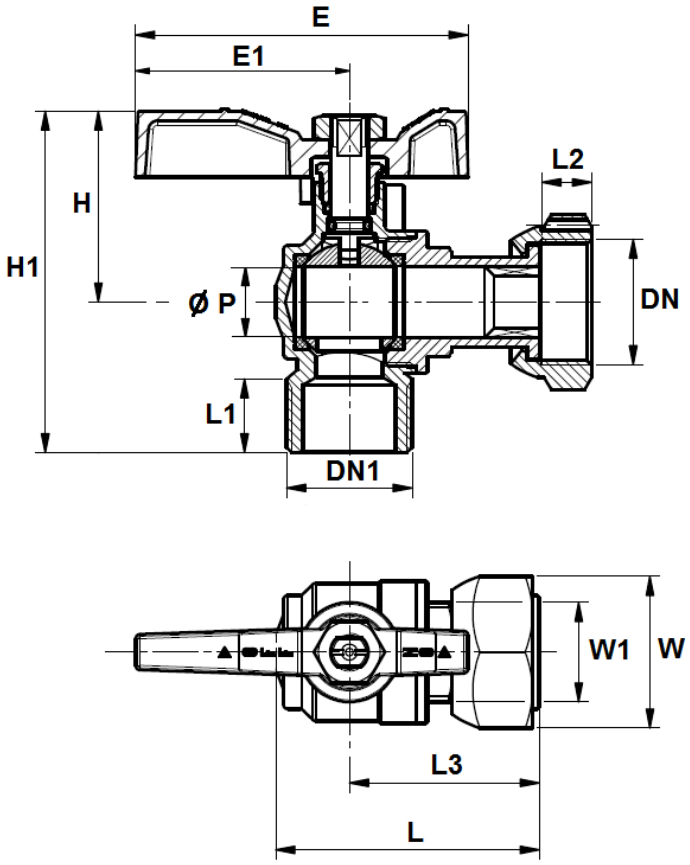

Ref.	DN	3/4"	3/4“
644 NF	DN1	1/2"	3/4“
	Ø P	15	15
	L	55.5	55.5
	L1	13	15
	L2	10	10
	L3	40	40
	E	70	70
	E1	45	45
	H	40	40
	H1	71.5	72
	W (on flat)	32	32
	W1 (on flat)	21	21
	Weight (in Kg)	0.270	0.275

ANGLE BRASS BALL VALVE FOR METER A.C.S.

SIZE FREE NUT / MALE WITH BRASS HANDLE TYPE REF.644 (in mm) :

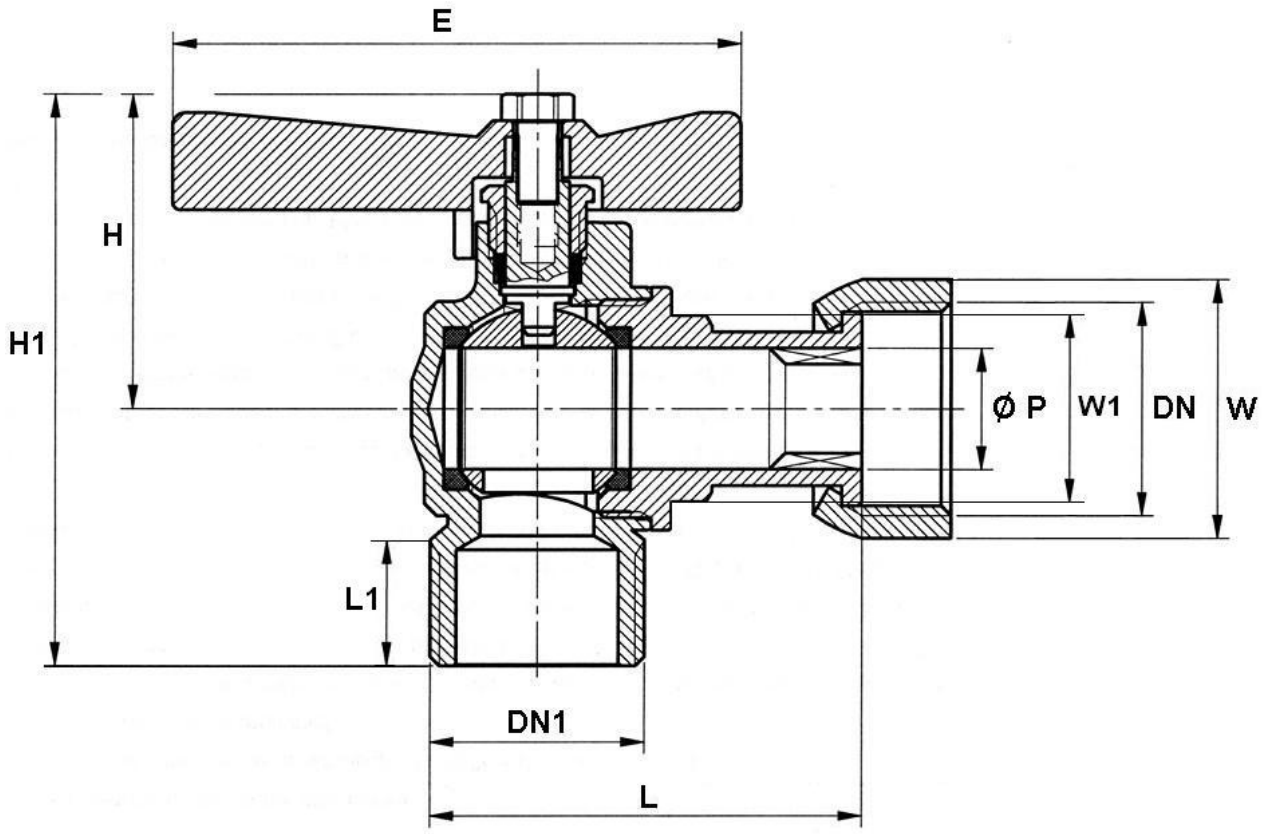

Ref.	DN	3/4“
644	DN1	1“
	Ø P	15
	L	55.5
	L1	14
	E	70
	H	38
	H1	90
	W (on flat)	32
	W1 (on flat)	-
	Weight (in Kg)	0.359

ANGLE BRASS BALL VALVE FOR METER A.C.S.

STANDARDS :

- Fabrication according to ISO 9001 : 2008
- DIRECTIVE 97/23/CE : Products excluded from directive (Article 1, § 3.2)
- French water agreement **A.C.S. N° 13 ACC LY 133**
- Threaded BSP cylindrical male and female according to ISO 228-1

ADVICE : Our opinion and our advice are not guaranteed and SFERACO shall not be liable for the consequences of damages.
The customer must check the right choice of the products with the real service conditions.

sferaco
VALVES & FITTINGS

REF. 644

ANGLE BRASS BALL VALVE FOR METER A.C.S.

INSTALLATION INSTRUCTIONS

GENERAL GUIDELINES :

- Ensure that the valves to be used are appropriate for the conditions of the installation (type of fluid,pressure and temperature).
- Be sure to have enough valves to be able to isolate the sections of piping as well as the appropriate equipment for maintenance and repair.
- Ensure that the valves to be installed are of correct strenght to be able to support the capacity of their usage.
- **Installation of all circuits should ensure that their function can be automatically tested on a regular basis (at least two times a year).**

INSTALLATION INSTRUCTIONS :

- **Before installing the valves,clean and remove any objects from the pipes** (in particular bits of sealing and metal) which could obstruct and block the valves.

- **Ensure that both connecting pipes either side of the valve (upstream and downstream) are aligned (if they're not,the valves may not work correctly).**

- **Make sure that the two sections of the pipe (upstream and downstream) match,the valve unit will not absorb any gaps.Any distortions in the pipes may affect the thightness of the connection,the working of the valve and can even cause a rupture.**To be sure,place the kit in position to ensure the assembling will work.

- Before starting the fitting,ensure that the threads and tapping are clean.

- **If sections of piping do not have their final support in place,they should be temporarily fixed.This is to avoid unnecessary strain on the valve.**

- The theoretical lenghts given by ISO/R7 for the tapping are typically longer than required,the lenght of the thread should be limited, and **check that the end of the tube does not press right up to the head of the thread.**

- For the sealing assembly valve piping, it is essential to use products that are compatible with the requirements of the French water agreement ACS : **plumbers hemp proscribed**.

- Position the pipe clips on both sides of the valve.
- If mounting on an air conditioning with PER tubing and hoses,it is necessary to support the tubes and hoses with the fixing to avoid strain on the valve.
- When screwing the valve,ensure that you only rotate on screwed side by the 6 ended side.Use an open ended spanner or an adjustable spanner and not a monkey wrench.
- **Never use a vice to tighten the fixings of the valve.**
- Do not over tighten the valve.Do not block with any extensions as it may cause a rupture or weakening of the casing**.**
- **In general,for all valves used in buildings and heating,do not tighten above a torque of 30 Nm.**

The advice and assembly instructions above do not conform to any guarantee.
The information is given in general.It states what must not and must be done.
It is provided to ensure the safety of the personnel and the reliability of the valves.
The instructions in bold must be followed

Sferaco 90 rue du Ruisseau 38297 St Quentin Fallavier Tel: + 33 (0) 474.94.15.90 Fax: + 33 (0) 474.95.62.08 Internet: www.sferaco.fr E-mail : sferaco@sferaco.fr

Information provided as an indication and subject to possible modification